Operating Systems
Lecture 6

Address Translation

Prof. Mengwei Xu

Recap: Thread Abstraction

- Thread: a single execution sequence that represents a separately schedulable task

Each thread executes a sequence of instructions (assignments, conditionals, loops, procedures, etc) just as in the sequential programming model

The OS can run, suspend, or resume a thread at any time

The minimal scheduling unit in OS!

Recap: Thread Abstraction

- Thread: a single execution sequence that represents a separately schedulable task

Threads in the same process share memory space, but not execution context

- There will be thread context switch

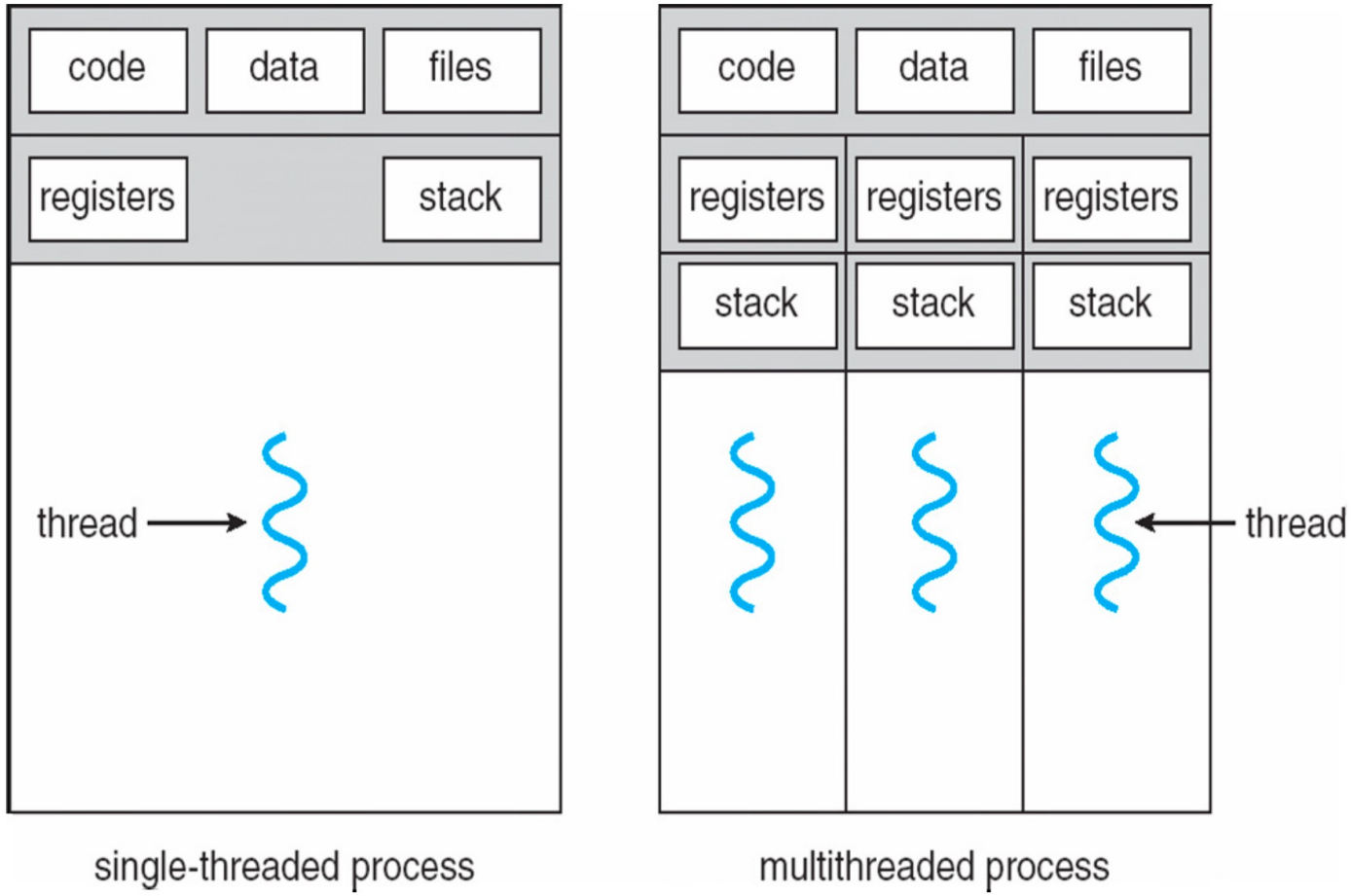

Recap: Thread vs. Process

	Thread	Process
Currency	Both of them can be scheduled by OS.	
Context	Different threads/processes have their dedicated execution contexts (registers values and stacks). Scheduling them incurs context switching.	
Definition	A single execution sequence that represents a separately schedulable task	An execution of any program
	The minimal scheduling unit "a lightweight process"	The minimal dedicated memory space
Resources	Consume less resources	Consume more resources
Memory	Threads in the same process share memory space	Processors do not share memory space
Communications	Easier and faster for threads in the same process to communicate with each other	More complex and slow for different processes to communicate with each other

Recap: Thread Data Structures

- Thread Control Block (TCB)
- Shared state
- OS does not enforce physical division on threads' own separated states
  - If thread A has a pointer to the stack location of thread B, can A access/modify the variables on the stack of thread B?

Recap: Thread Implementation

- Create a thread
  - Allocate per-thread state: the TCB and stack
  - Initialize per-thread state: registers (args)
  - Put TCB on ready list
- Delete a thread
  - Remove the thread from the ready list so it will never run again
  - Free the per-thread state allocated for the thread
  - Can a thread delete itself?
- Context Switch
  - Voluntary: thread_yield
  - Involuntary: interrupts and exceptions

Implementing Multi-threaded Processes

- Implementing user-level multi-threaded processes through
  1. Kernel threads (each thread op traps into kernel)
  2. User-level libraries (no kernel support)
  3. Hybrid mode

Implementing Multi-threaded Processes

- Implementing multi-threaded processes through kernel threads
  - Each thread operation invokes the corresponding kernel thread syscall

Create a kernel thread

- Allocate per-thread state in kernel: the TCB and stack
- Initialize per-thread state: registers (args)
- Put TCB on ready list

Create a user-level thread

- User lib allocates a user-level stack
- Invokes thread_create() syscall
- Stores a pointer to the TCB in the PCB (why?)

How about join, yield, exit?

Implementing Multi-threaded Processes

- Implementing multi-threaded processes in user libraries
  - The library maintains everything in user space
    - TCBs, stacks, ready list, finished list
  - The library determines which thread to run
  - A thread op is just a procedure call
- How can we make user-level threads run currently, as kernel is not aware of their existence?
  - The preemptive way: timer interrupts (upcall) from kernel
  - The cooperative way: threads yield voluntarily
- How can program change the PC and stack pointer?
  - jmp and esp

Threads in Kernel vs. User

	User-level Threads	Kernel Threads
Currency	Both of them run currently	
Context	Share heap/code, but have separated stack/registers	
Role of kernel	No kernel assistance at all	Each thread operation invokes kernel syscall
Speed (context switch, creating, etc)	Fast	Slow
Memory cost	Small	Large
I/O waiting time	Cannot avoid the I/O waiting time (though there are certain optimizations to do so)	Kernel can schedule another thread when I/O blocks
Multi-core processor	No parallel on multi-core processors	Can schedule many threads in the same process at the same time on multi-core processors

Implementing Multi-threaded Processes

- Implementing multi-threaded processes in hybrid way: optimizations based on kernel threads
  - Hybrid thread join: for example, no need for syscall if the thread to be joined is already finished (with exit value saved in memory)
  - Per-processor kernel thread with user-level thread implementation
  - Scheduler activations: in recent Windows, the user-level scheduler can be notified when a thread blocks in a syscall, so it can schedule another thread to fully utilize the processor.

Goals for Today

- Address Translation Concept
- Segmentation (分段)
- Paging (分页)

Goals for Today

- Address Translation Concept
- Segmentation (分段)
- Paging (分页)

Address Translation

- From virtual memory address (虚拟内存地址) to physical memory address (物理内存地址)

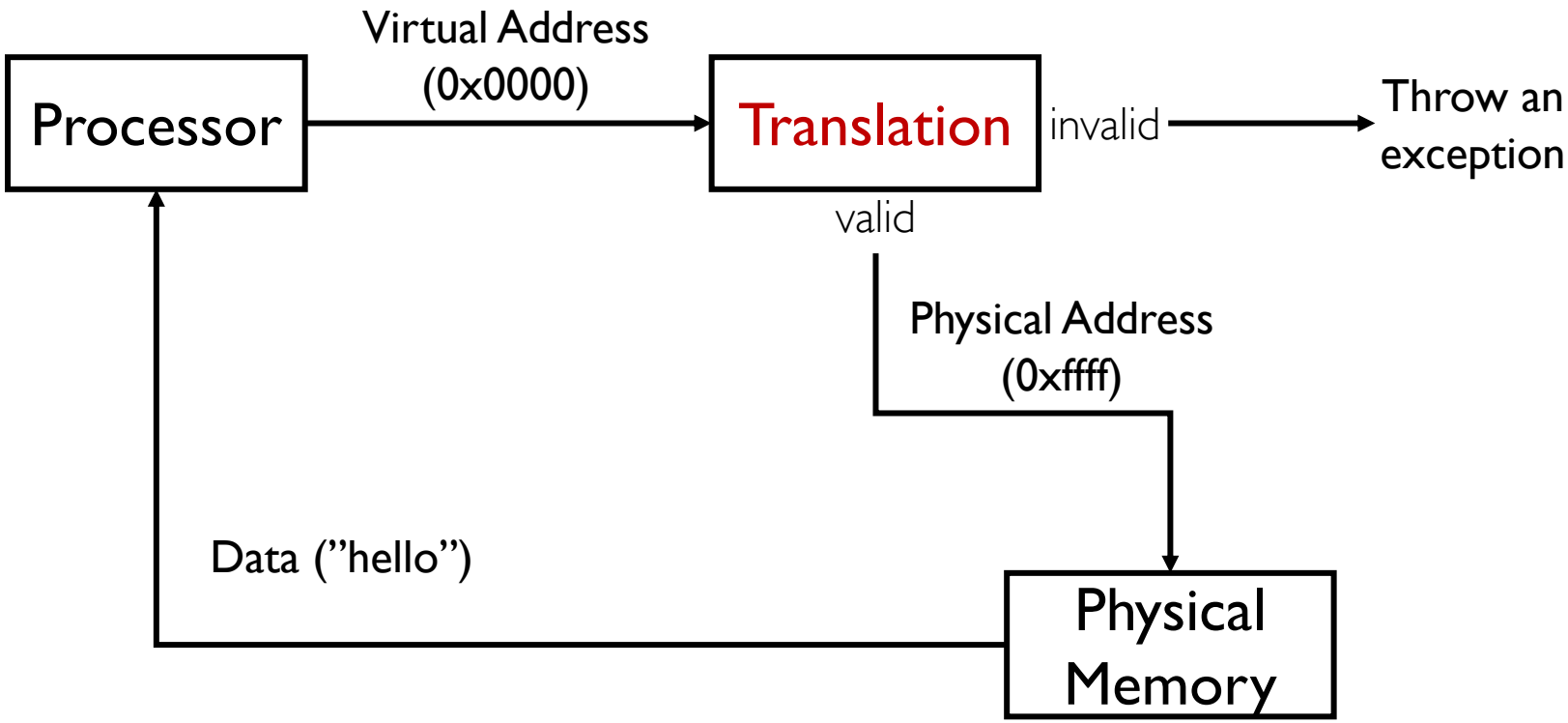

Address Translation

- From virtual memory address (虚拟内存地址) to physical memory address (物理内存地址)
- The goals and motivations of address translation
  - Memory protection
  - Memory sharing
  - Flexible memory placement
  - Sparse addresses
  - Runtime lookup efficiency
  - Compact translation tables
  - Portability

Address Translation

- From virtual memory address (虚拟内存地址) to physical memory address (物理内存地址)
- The goals and motivations of address translation
- When translation exists, processor uses virtual addresses, physical memory uses physical addresses
  - Not every processor/OS has address translation, e.g., certain embedded chips.

Address Translation

- From virtual memory address (虚拟内存地址) to physical memory address (物理内存地址)
- The goals and motivations of address translation
- When translation exists, processor uses virtual addresses, physical memory uses physical addresses
- Address translation involves intensive hardware-OS cooperation

Address Translation

- From virtual memory address (虚拟内存地址) to physical memory address (物理内存地址)
- The goals and motivations of address translation
- When translation exists, processor uses virtual addresses, physical memory uses physical addresses
- Address translation involves intensive hardware-OS cooperation
- Address space: all the addresses and state a process can touch
  - Each process and kernel has different address space

Goals for Today

- Address Translation Concept
- Segmentation (分段)
- Paging (分页)

Segmented Memory

- Simpliest approach: *base* and *bounds* registers
  - Every memory access is checked on those registers

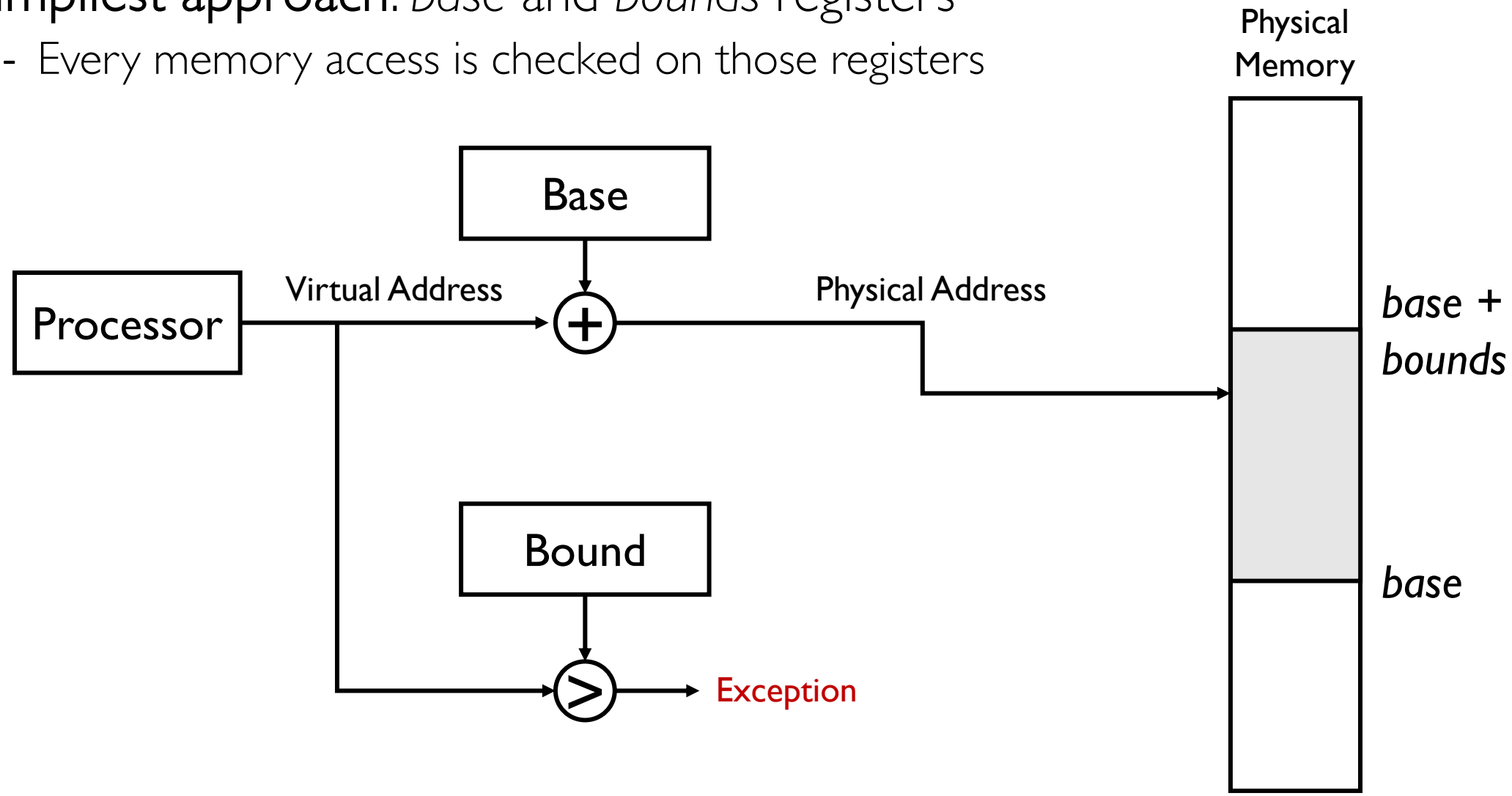

Segmented Memory

- Segmentation with a segment table (分段表)

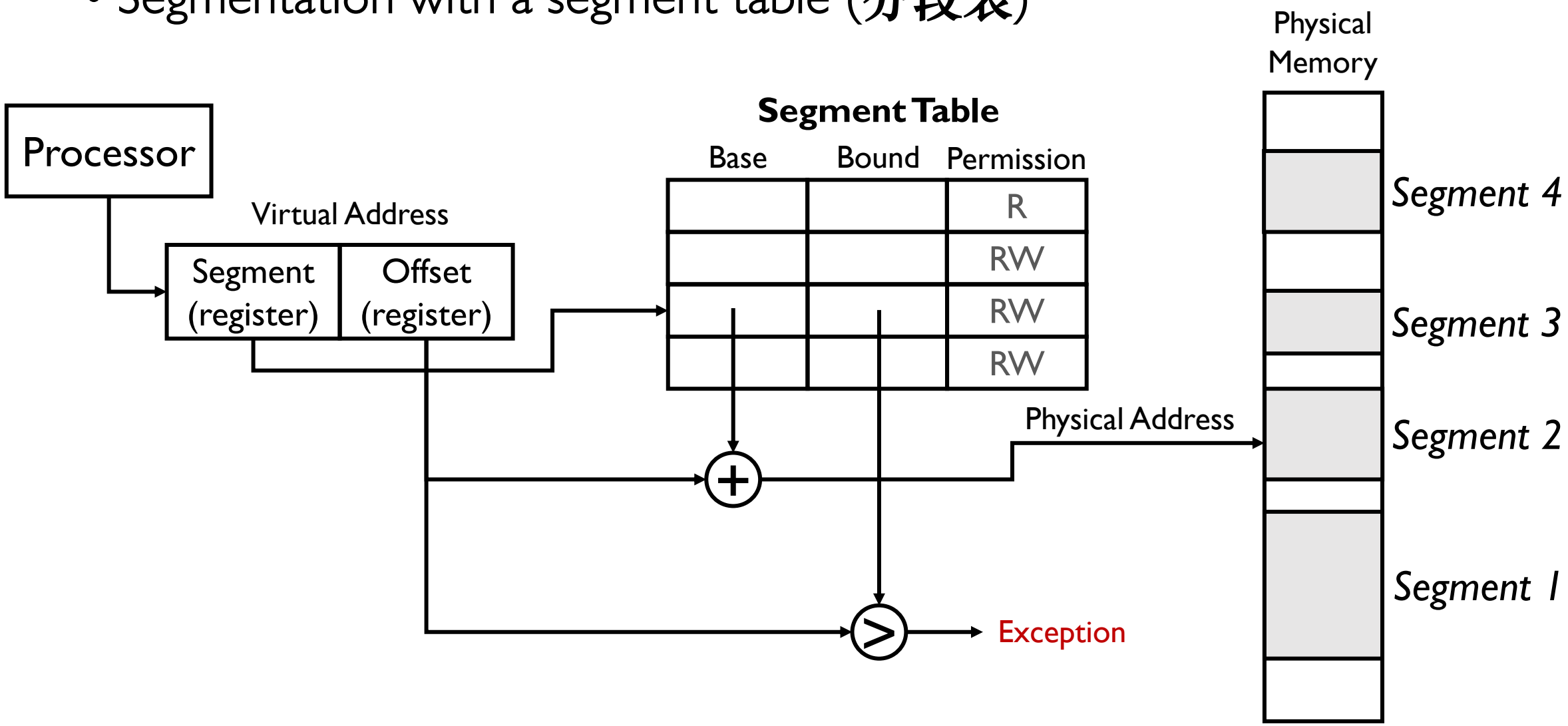

Segmented Memory

- Segmentation with a segment table (分段表)

  - *Why there are "holes" in the physical memory*
  - *What if a program branches into those "holes"?*

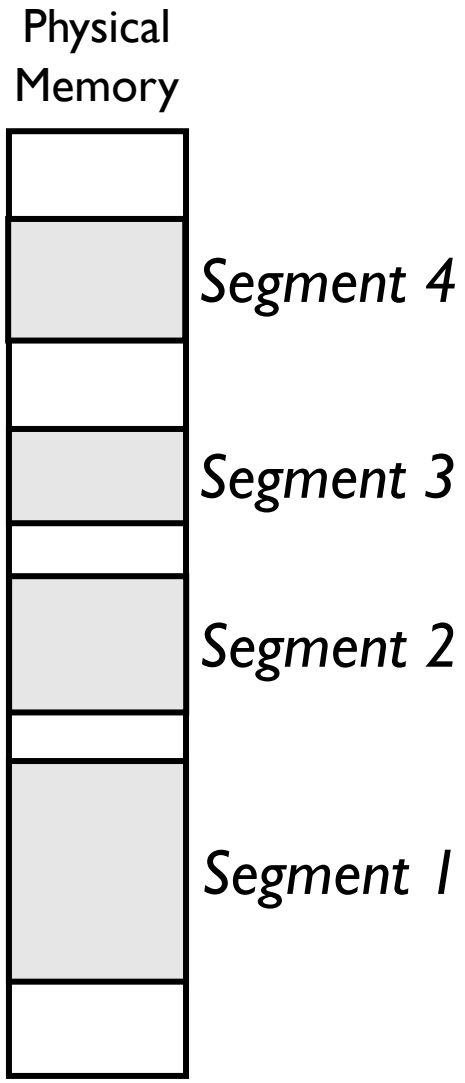

Segmented Memory

- Segmentation with a segment table (分段表)

  - *Why there are "holes" in the physical memory*
    - Processes come and go..
  - *What if a program branches into those "holes"?*
    - Segmentation error..

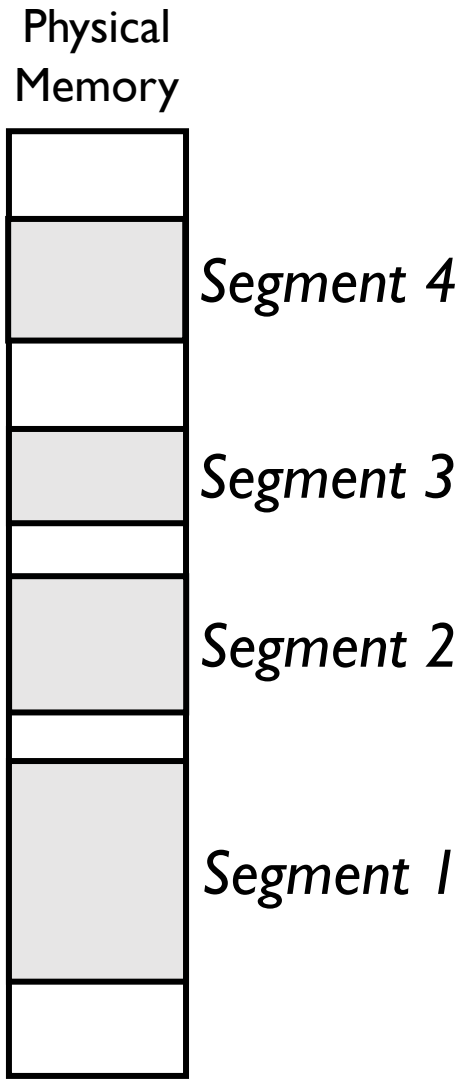

Segmented Memory

- The real segmentation implementation could vary a lot
  - Some OSes like Multics allocates a segment for each data structure to allow fine-grained protection and sharing between processes
  - Most modern systems use segments only for coarse-grained memory regions

Segmented Memory

- An x86 view of memory segmentation (each 16-bits long)
  - Code segment: CS
  - Data segment: DS
  - Stack segment: SS
  - Extra segment: ES, FS GS

```
movl $foo, 0x10(%esp)
=
movl $foo, %ss:0x10(%esp)
```

- Developer practice
  - All CPU instructions are implicitly fetched from the code segment (CS register).
  - Most memory references come from the data segment specified by the segment selector held in the DS register. These may also come from the extra segment specified by the segment selector held in the ES register, if a segment-override prefix precedes the instruction that makes the memory reference.
  - Processor stack references, either implicitly (e.g. push and pop instructions) or explicitly (memory accesses using (E)SP or (E)BP registers) use the stack segment (SS register).
  - String instructions (e.g. stos, movs), along with data segment, also use the extra segment specified by the segment selector held in the ES register.

Segmented Memory

- An x86 view of memory segmentation
  - In real mode, there is no segment table

	0000 0110 1110 1111 0000	**Segment**, 16 bits, shifted 4 bits left (or multiplied by 0x10)
+	0001 0010 0011 0100	**Offset**, 16 bits
	————————————————	
	0000 1000 0001 0010 0100	**Address**, 20 bits

In real mode

no segment table!

Segmented Memory

- An x86 view of memory segmentation
  - In protected mode, the segment table is called global descriptor table (GDT, 全局描述符表) or local descriptor table (LDT, 局部描述符表)
  - Linear address = base address + offset

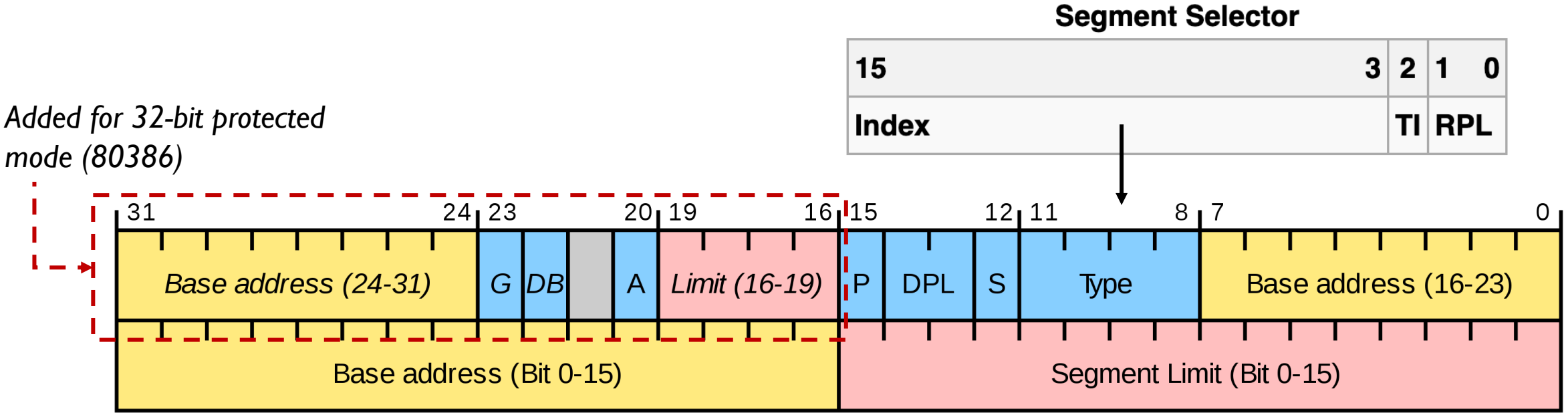

A segment descriptor

Segmented Memory

- An x86 view of memory segmentation
  - In protected mode, the segment table is called global descriptor table (GDT, 全局描述符表) or local descriptor table (LDT, 局部描述符表)
  - Linear address = base address + offset

```
// Segment Descriptors
struct Segdesc {
    unsigned sd_lim_15_0 : 16;  // Low bits of segment limit
    unsigned sd_base_15_0 : 16; // Low bits of segment base address
    unsigned sd_base_23_16 : 8; // Middle bits of segment base address
    unsigned sd_type : 4;       // Segment type (see STS_ constants)
    unsigned sd_s : 1;          // 0 = system, 1 = application
    unsigned sd_dpl : 2;        // Descriptor Privilege Level
    unsigned sd_p : 1;          // Present
    unsigned sd_lim_19_16 : 4;  // High bits of segment limit
    unsigned sd_avl : 1;        // Unused (available for software use)
    unsigned sd_rsv1 : 1;       // Reserved
    unsigned sd_db : 1;         // 0 = 16-bit segment, 1 = 32-bit segment
    unsigned sd_g : 1;          // Granularity: limit scaled by 4K when set
    unsigned sd_base_31_24 : 8; // High bits of segment base address
};
```

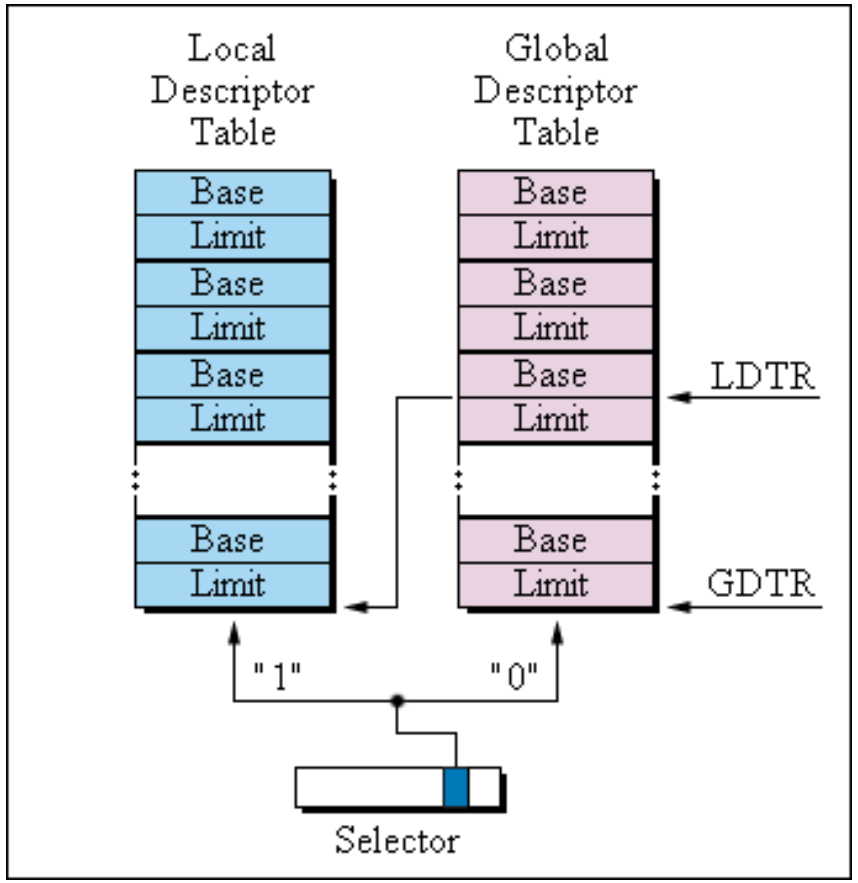

Segmented Memory

- The power of segmentation
  - Access control
  - Code sharing (library routines)
  - Inter-process communication
  - Efficient management of dynamically allocated memory

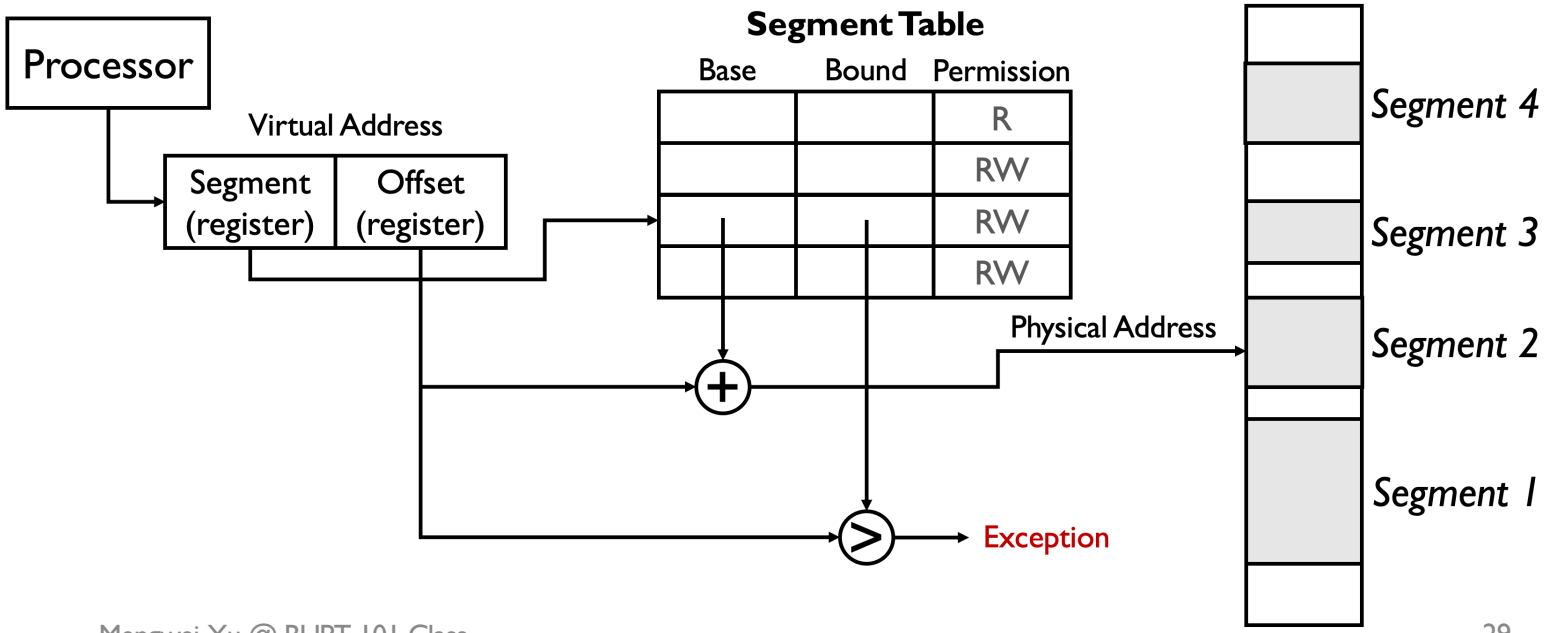

Segmented Memory

- The principle downside of segmentation: overhead of managing a large number of variable size and dynamically growing memory segments.
  - *External fragmentation*: free space becomes noncontiguous
  - Compacting the memory is very slow
  - It becomes even more complex if the segments can grow (like heap)

Goals for Today

- Address Translation Concept
- Segmentation (分段)
- Paging (分页)

Paged Memory

- Paging (分页): allocating memory in fixed-sized chunks called page frames (页框)
- A page table (页表) stores for each process whose entries contain pointers to the page frames.
  - More compact than segment table because it does not need to store "bound"
- What's cool: the pages are scattered across physical memory regions
  - Yet within a page, the memory access is contiguous
  - For instance, a large matrix might span many pages
- Memory allocation becomes very simple: find a page frame.

Paged Memory

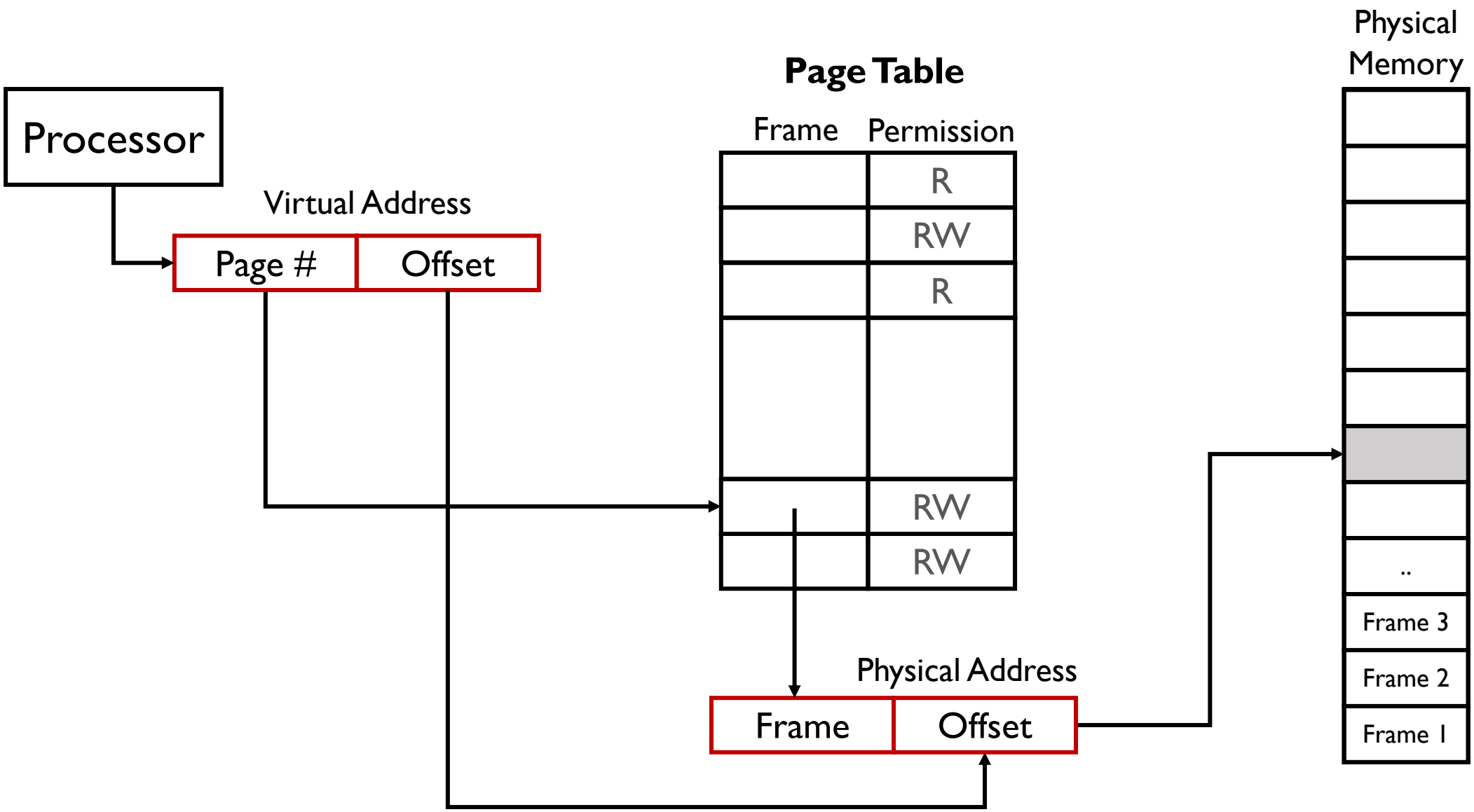

Paged Memory

One-level page table for 32-bit addressing

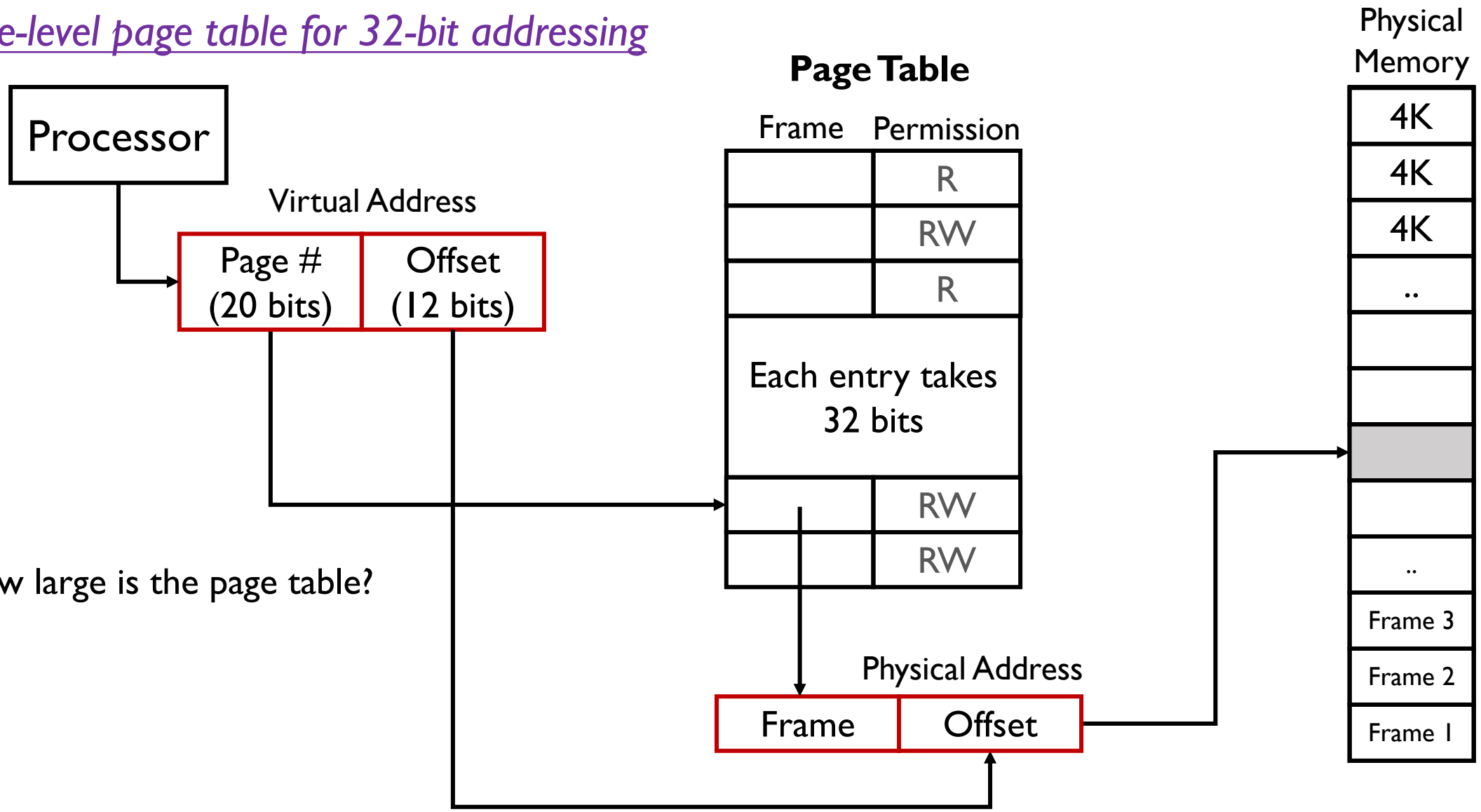

How large is the page table?

Paged Memory

One-level page table for 32-bit addressing

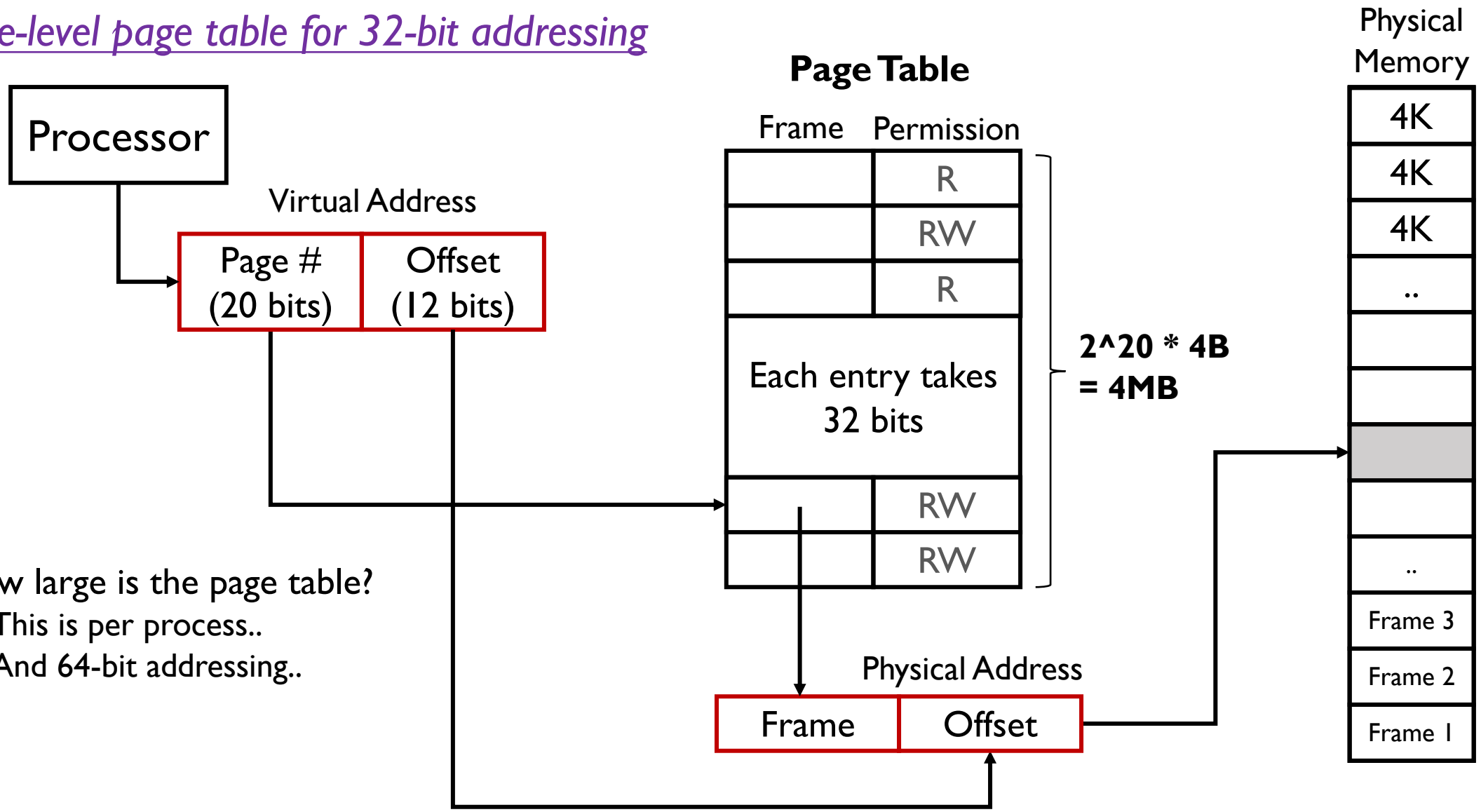

How large is the page table?

- This is per process..
- And 64-bit addressing..

Paged Memory

Single-level paging solves most of the issues (e.g., sharing as shown), but has large page table, which could be larger than the memory usage of the process itself!

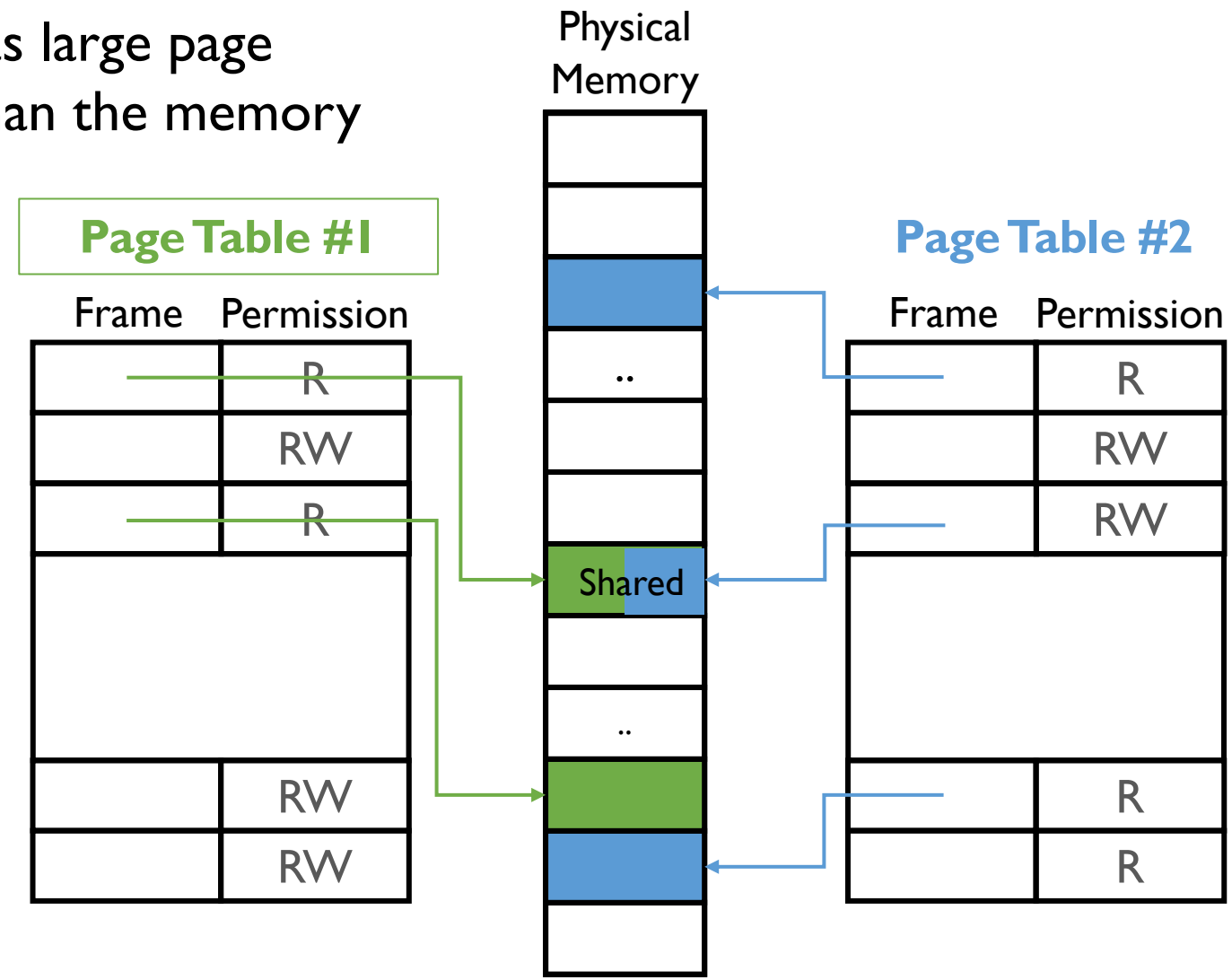

Multi-level Paging

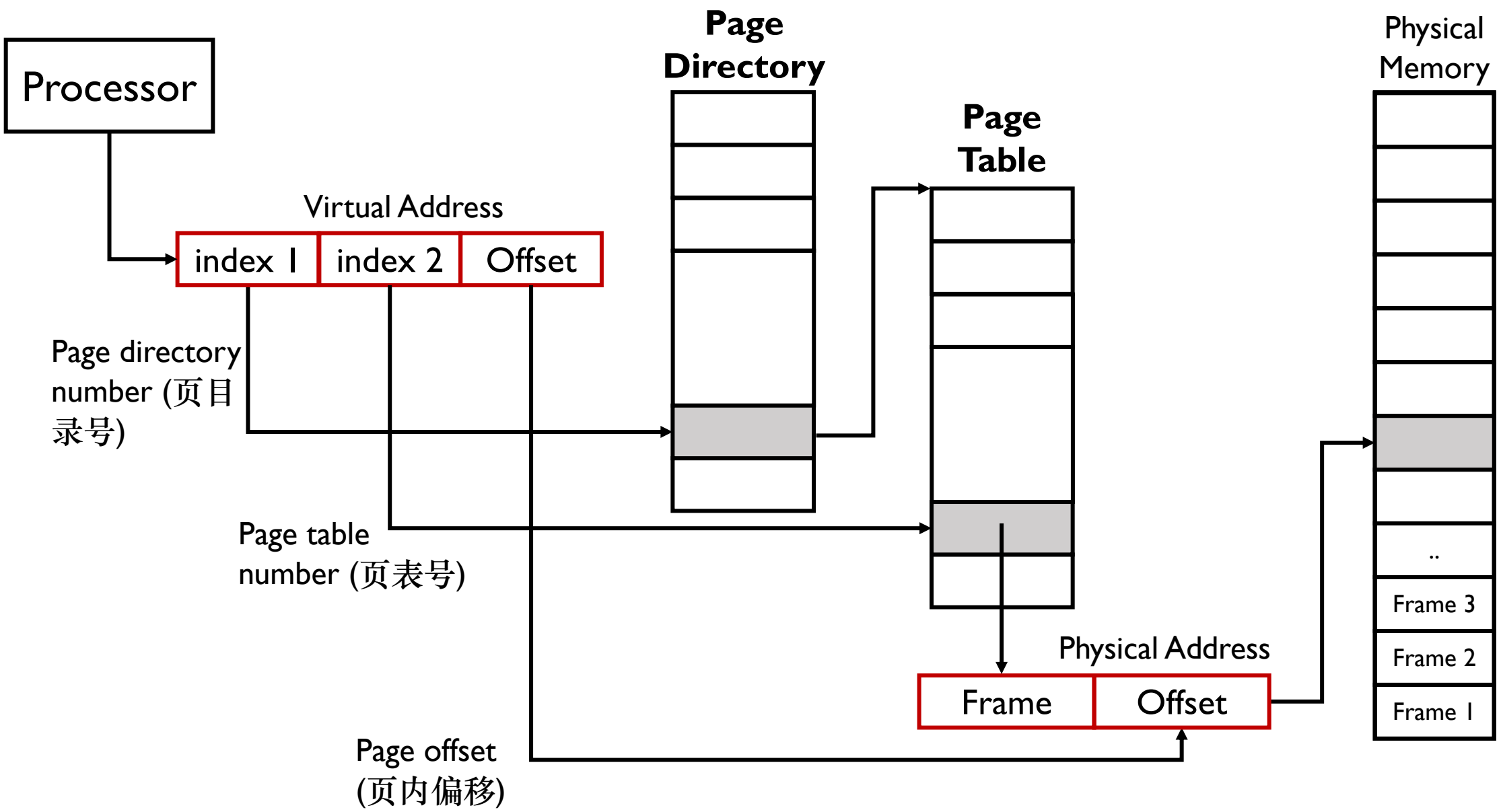

x86 Multi-level Paging

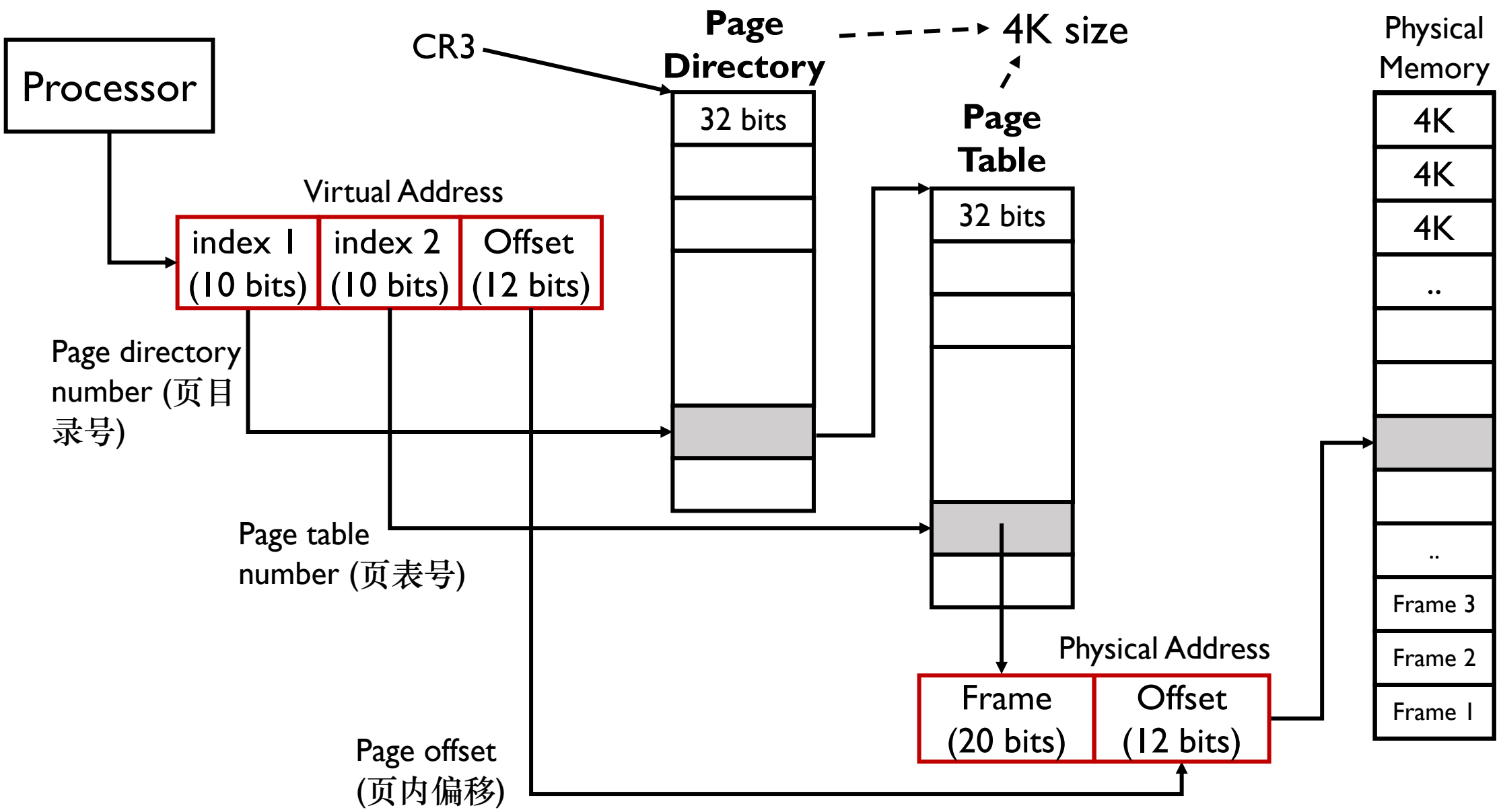

x86 Multi-level Paging

Example (4 byte pages)

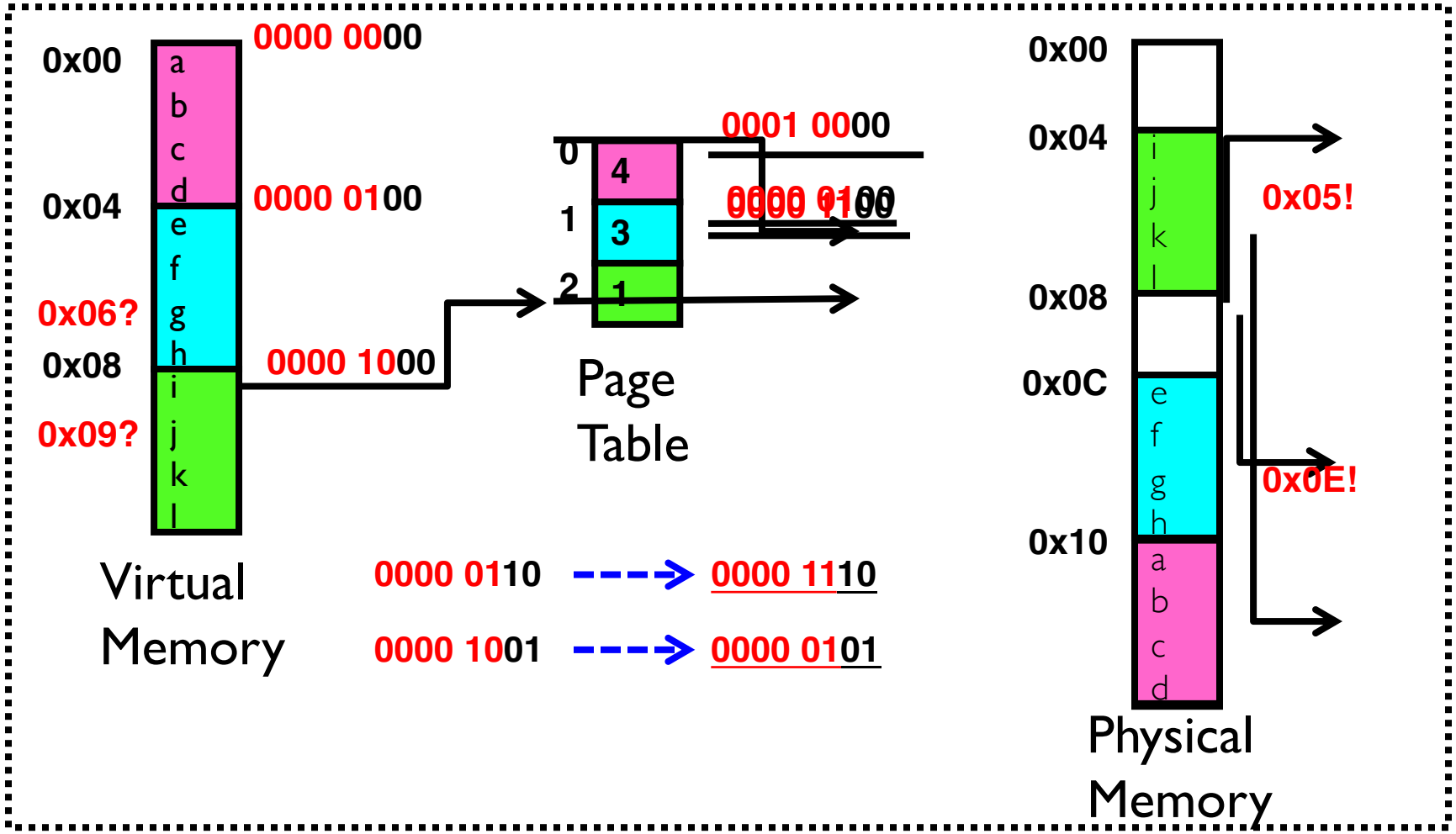

x86 Multi-level Paging

- Each page directory entry (PDE, 页目录项) is 32-bits long.

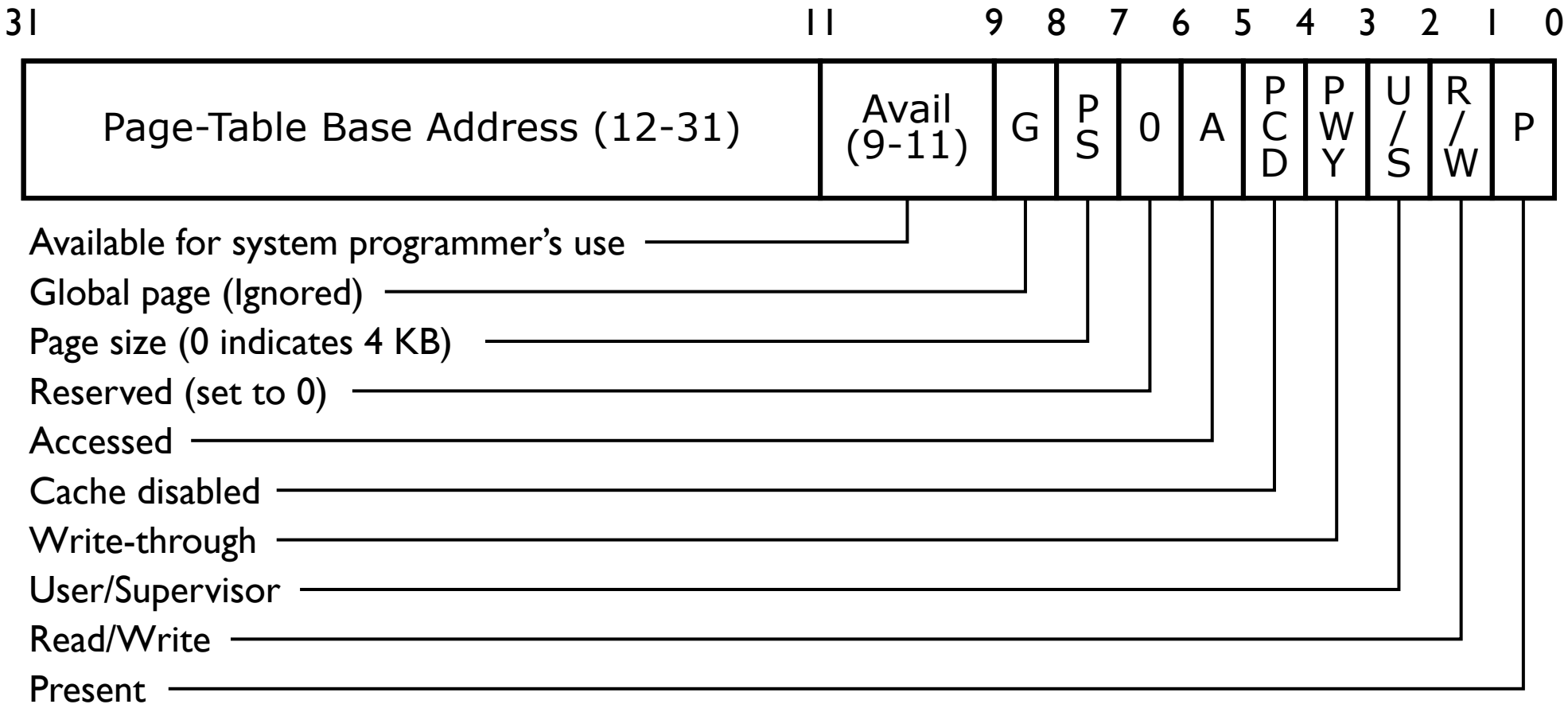

x86 Multi-level Paging

- Each page table entry (PTE, 页表项) is 32-bits long.

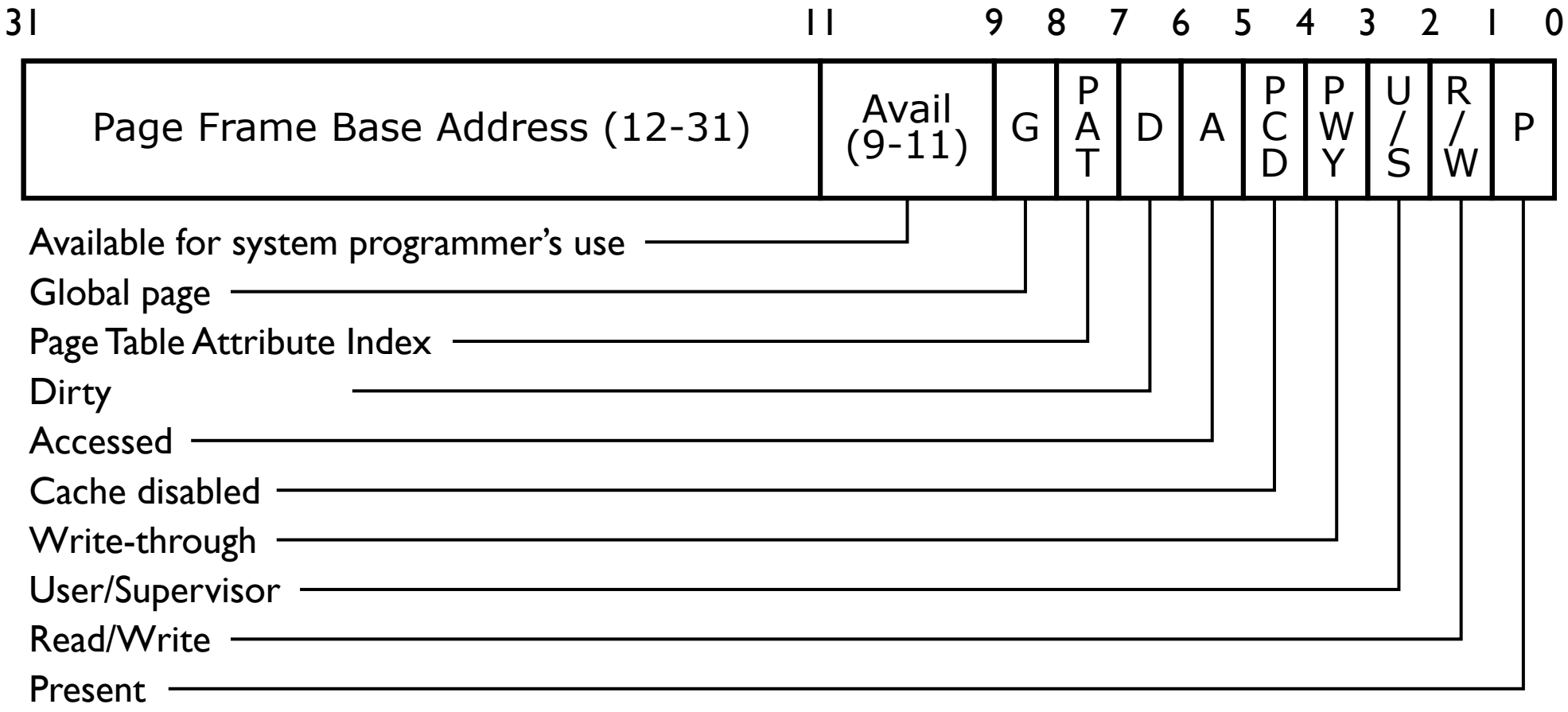

x86 Multi-level Paging

- Memory management unit (MMU, 分页内存管理单元): the hardware that actually does the translation
  - Usually located in CPU

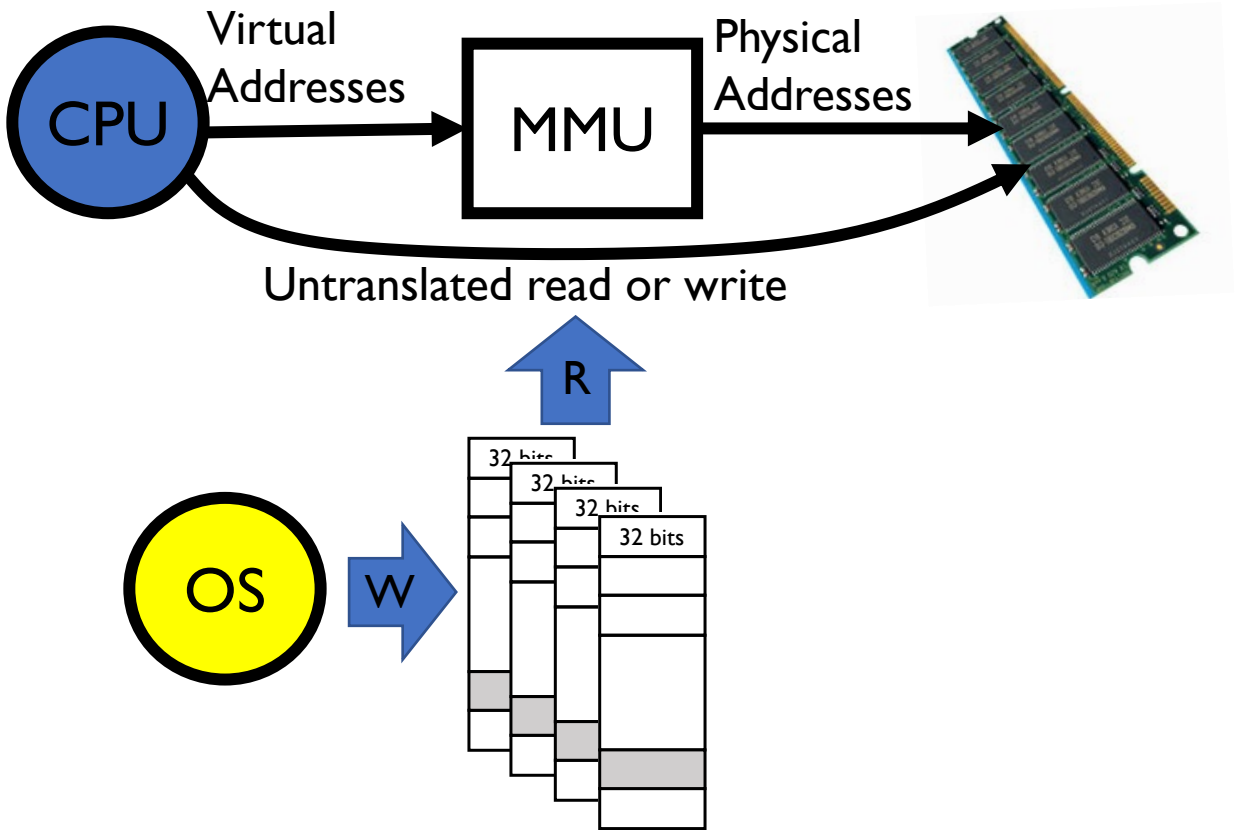

x86 Multi-level Paging

- Memory management unit (MMU, 分页内存管理单元): the hardware that actually does the translation
- Page size shall be neither too small or too large
  - Too small: large page table sizes; low cache hit ratio
  - Too large: memory waste
  - Typical range: 512B to 8192B; default 4KB on Linux.

x86 Multi-level Paging

- Memory management unit (MMU, 分页内存管理单元): the hardware that actually does the translation
- Page size shall be neither too small or too large
- Each process ~~and kernel~~ has their own page table!
  - Not threads
  - The same address of different processes translate to different physical locations, unless the page is shared
  - A process can only access/modify its own page table! Otherwise..
  - In Linux, there is only one kernel space for all process

x86 Multi-level Paging

- Memory management unit (MMU, 分页内存管理单元): the hardware that actually does the translation
- Page size shall be neither too small or too large
- Each process and kernel has their own page table!
- Page tables can be sparse (vs. single-level paging)
  - Not every PDE has a corresponding page table.
  - Saves a lot of space.
  - It's good to fit page table into one page.

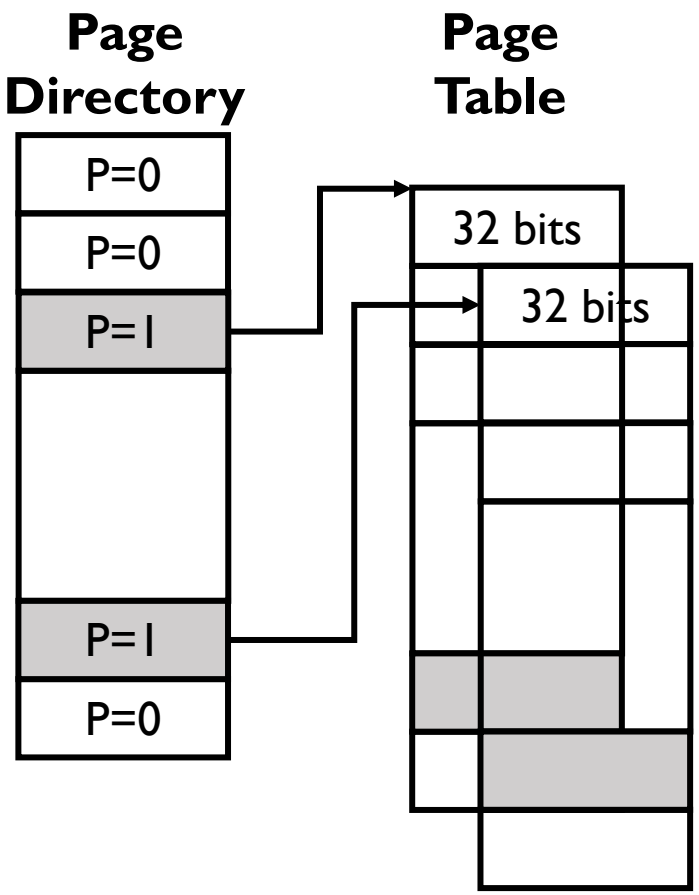

Page Fault

- Page Fault (缺页中断) happens when CPU/MMU accesses a memory location that is not readily mapped
  - Pure (soft): memory swapped out; shared pages; etc.
    - ❑ After handled, the access will be performed again
  - Invalid (hard): write to read-only pages; access to pages not allocated; etc.
    - ❑ Segmentation fault!

- In modern OSes, malloc does memory allocation "lazily"
  - It allocates virtual memory immediately
  - The physical memory is allocated only when program accesses that memory through page fault handler
  - Why?

Page Fault

```
#include <stdio.h>

void main() {
▸     int* x = (int *) malloc(4096*3);
      // ..
      x[0] = 1;
      // ..
      x[4096] = 2;
      // ..
      return;
}
```

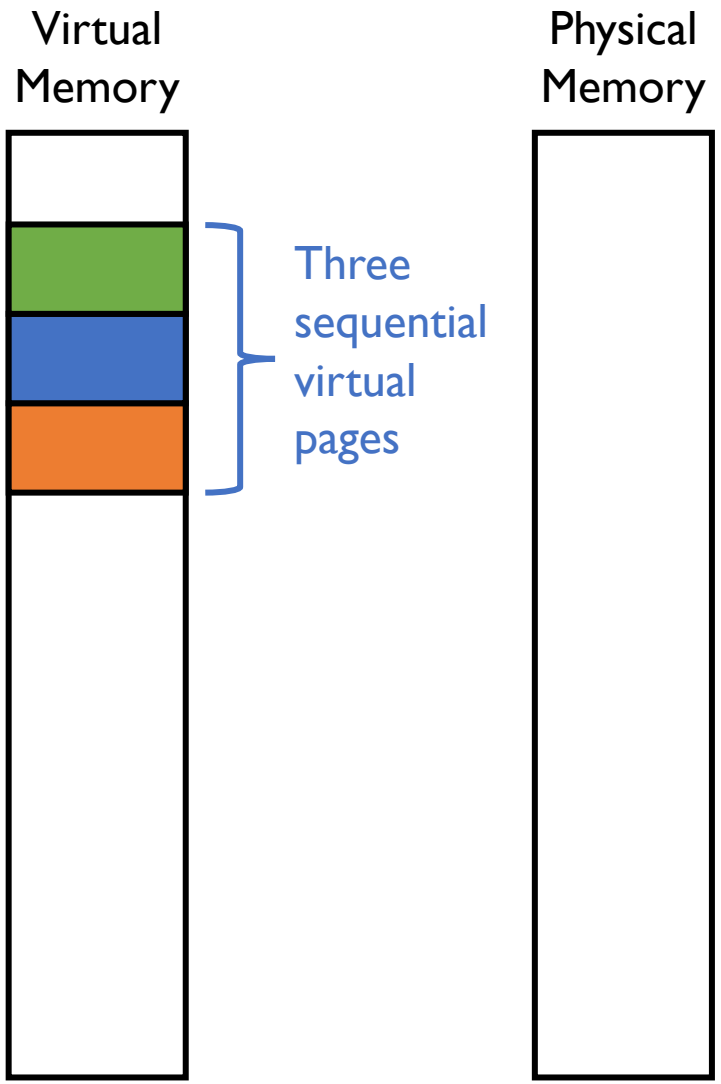

Page Fault

```
#include <stdio.h>

void main() {
      int* x = (int *) malloc(4096*3);
      // ..
▸     x[0] = 1;
      // ..
      x[4096] = 2;
      // ..
      return;
}
```

1. Page fault
2. Physical page allocation
3. Page mapping

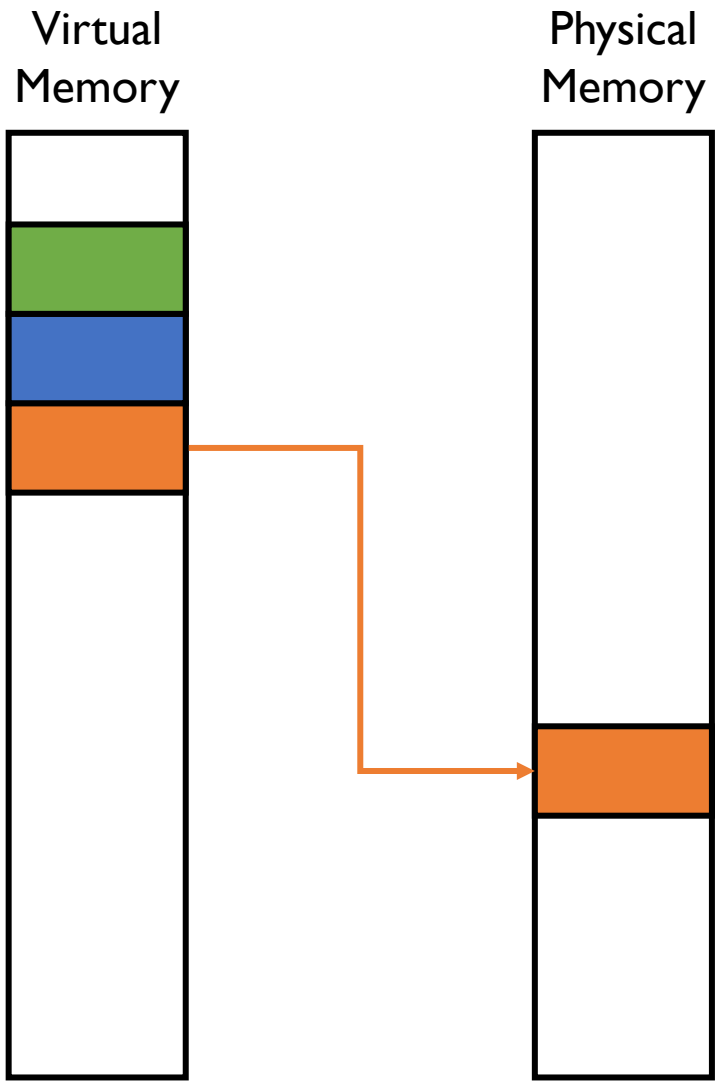

Page Fault

```
#include <stdio.h>

void main() {
      int* x = (int *) malloc(4096*3);
      // ..
      x[0] = 1;
      // ..
▸     x[4096] = 2;
      // ..
      return;
}
```

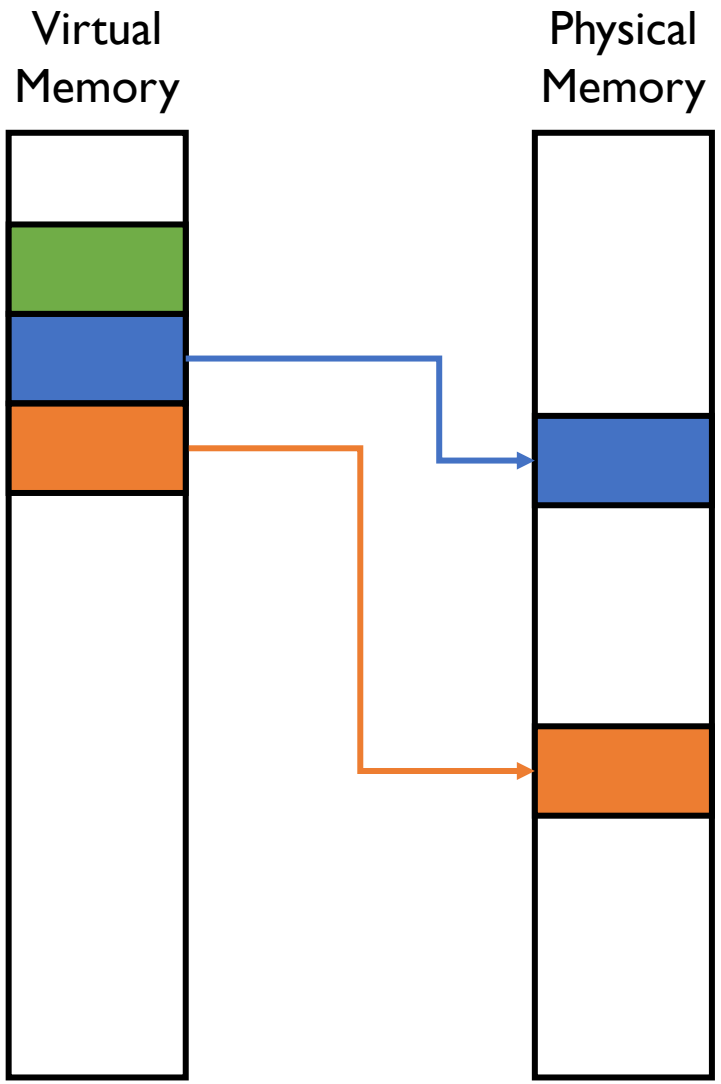

Detailed Page Fault Process

Before Page Fault (done by hardware)

Process executes a memory load or store instruction, or fetches an instruction

~~The address is first feed to cache or instruction prefetch buffer, if it is there, done;~~

~~If it is not there, the address is feed to TLB, to try to find a page translation entry for it (note that the address is virtual address);~~

~~If hit in TLB, check for R/W/E permissions.~~

~~If not approved, page fault!~~

~~If approved, take the physical page number, concatenate it with the page offset, and send the address to memory bus;~~

~~If miss in TLB, MMU tries to find page table entry;~~

~~If page table entry found, the entry is put to TLB --- some entry has to be replaced out of TLB, hardware-decided replacement, random replacement;~~

If MMU can't find page table entry or permission not satisfied, page fault!

ref: https://pages.cs.wisc.edu/~cao/cs537/lecture17.txt

Detailed Page Fault Process

Handling Page Fault (done by hardware)

What kind of fault is it?

R/W/E permission denied: terminate program and generate core-dump file, or send a signal to the program

address not in the ranges of addresses that are allowed to be referenced by the program: terminate program and generate core-dump files

else, a legitimate page fault (let's say the virtual page that is to be faulted in is U)

First find a physical page for it, say page P

~~P already used?~~

~~process Q has V->P mapping~~

Y

~~If V has been modified since it is put in main memory, write V back to the disk~~

~~Change process Q's page table entry for page V (which holds translations V->P) to invalid;~~

~~Invalidate corresponding TLB entry if necessary~~

N

Initialize the content of P

U in disk?

N

Set all bytes in P to zero

Y

~~Read U from disk (during this time, the process is blocked, and the CPU scheduler puts some other process to run on CPU)~~

After P is initialized, change the page table entry for U to be U-->P, and set the entry to be valid & clean;

After the interrupt processing, the process will retry the instruction that was not finished due to the page fault

ref: https://pages.cs.wisc.edu/~cao/cs537/lecture17.txt

x86 Multi-level Paging

- Why PDE/PTE use 20 bits for addressing the next-level table or page?
- What needs to be switched on a context switch?
- If a process needs 1 page for its data, how many it will actually take?
- The largest address can be accessed in 2-level paging (32 bits address)?

x86 Multi-level Paging

- Why PDE/PTE use 20 bits for addressing the next-level table or page?
  - Page directory/tables are always page-aligned (% 4k = 0).
- What needs to be switched on a context switch?
  - The page directory, stored in CR3
- If a process needs 1 page for its data, how many it will actually take?
  - 3 in total (1 page directory + 1 page table + 1 page for its data)
- The largest address can be accessed in 2-level paging (32 bits address)?
  - 4K * 2^10 * 2^10 = 4G

Virtual or Physical??

- CR3 stores the virtual or physical address of the page directory?
- How about the PDE/PTE?
- The pointers used by kernel is virtual or physical?
- How can kernel manipulate the page directory/tables?

https://wiki.osdev.org/Paging#Manipulation

Tracing Memory Access

```
int array[1000];
...
for (i = 0; i < 1000; i++)
    array[i] = 0;
```

```
1024 movl $0x0,(%edi,%eax,4)
1028 incl %eax
1032 cmpl $0x03e8,%eax
1036 jne  1024
```

- Line 1024: It moves the value zero (shown as $0x0) into the virtual memory address of the location of the array; this address is computed by taking the contents of %edi and adding %eax multiplied by four to it. Thus, %edi holds the base address of the array, whereas %eax holds the array index (i); we multiply by four because the array is an array of integers, each of size four bytes.
- Line 1028: It increments the array index held in %eax.
- Line 1032: It compares the contents of that register to the hex value 0x03e8 (decimal 1000). If the comparison shows that two values are not yet equal, goes to the Line 1036.
- Line 1036: It jumps back to the top of the loop.

How many times each loop accesses memory and physical pages, assuming it's single-level paging system?

4x instructions (code), 1x array (data), and 5x page table.

Tracing Memory Access

```
int array[1000];
...
for (i = 0; i < 1000; i++)
    array[i] = 0;
```

```
1024 movl $0x0,(%edi,%eax,4)
1028 incl %eax
1032 cmpl $0x03e8,%eax
1036 jne  1024
```

For this example, we assume a virtual address space of size 64KB (unrealistically small). We also assume a page size of 1KB.

All we need to know now are the contents of the page table, and its location in physical memory. Let's assume we have a linear (array-based) page table and that it is located at physical address 1KB (1024).

As for its contents, there are just a few virtual pages we need to worry about having mapped for this example. First, there is the virtual page the code lives on. Because the page size is 1KB, virtual address 1024 resides on the second page of the virtual address space (VPN=1, as VPN=0 is the first page). Let's assume this virtual page maps to physical frame 4 (VPN 1 → PFN 4).

Next, there is the array itself. Its size is 4000 bytes (1000 integers), and we assume that it resides at virtual addresses 40000 through 44000 (not including the last byte). The virtual pages for this decimal range are VPN=39 ... VPN=42. Thus, we need mappings for these pages. Let's assume these virtual-to-physical mappings for the example: (VPN 39 → PFN 7), (VPN 40 → PFN 8), (VPN 41 → PFN 9), (VPN 42 → PFN 10).

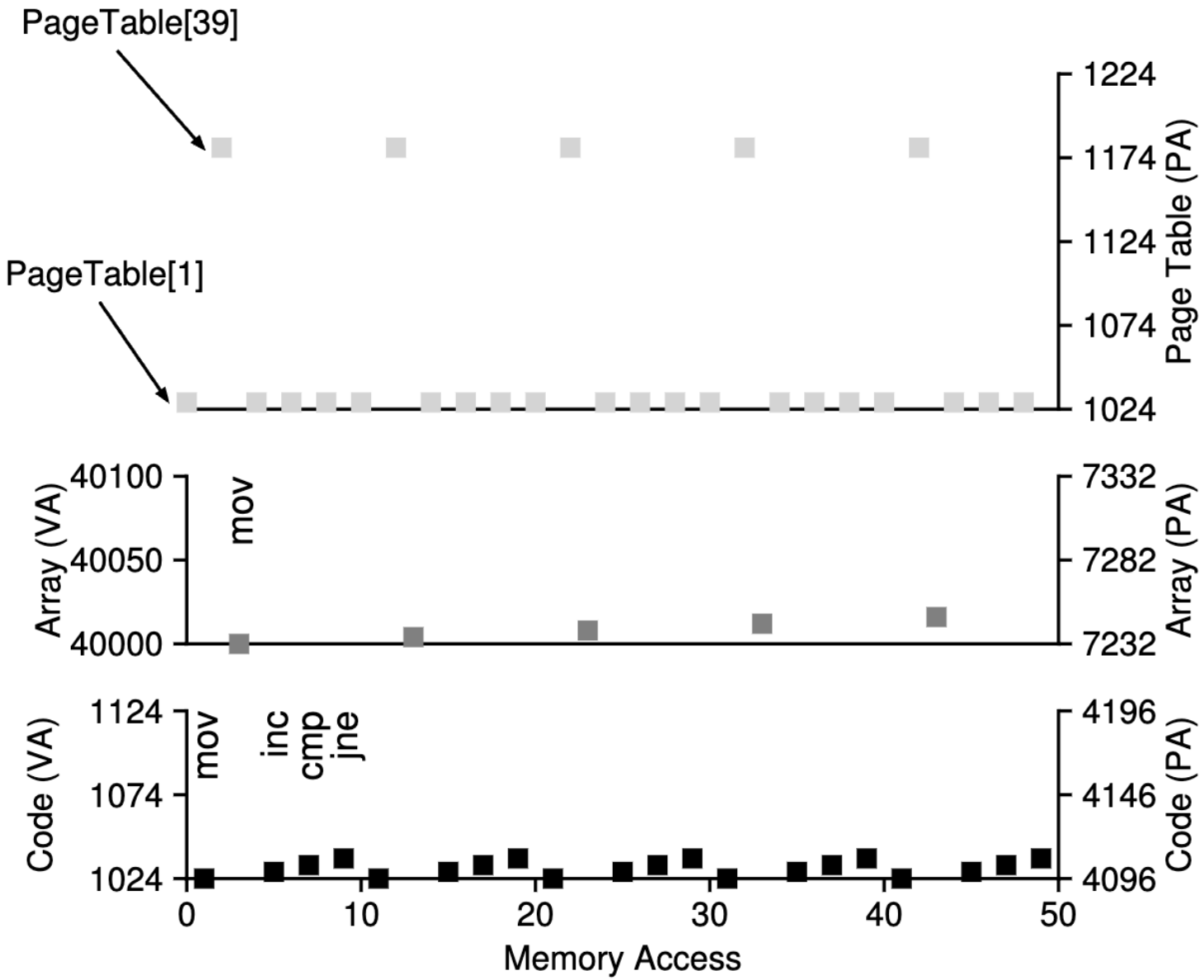

Manipulating Page Table

- Since OS only sees the virtual address, how can it manipulate the page table, e.g., getting the physical address of a given virtual address

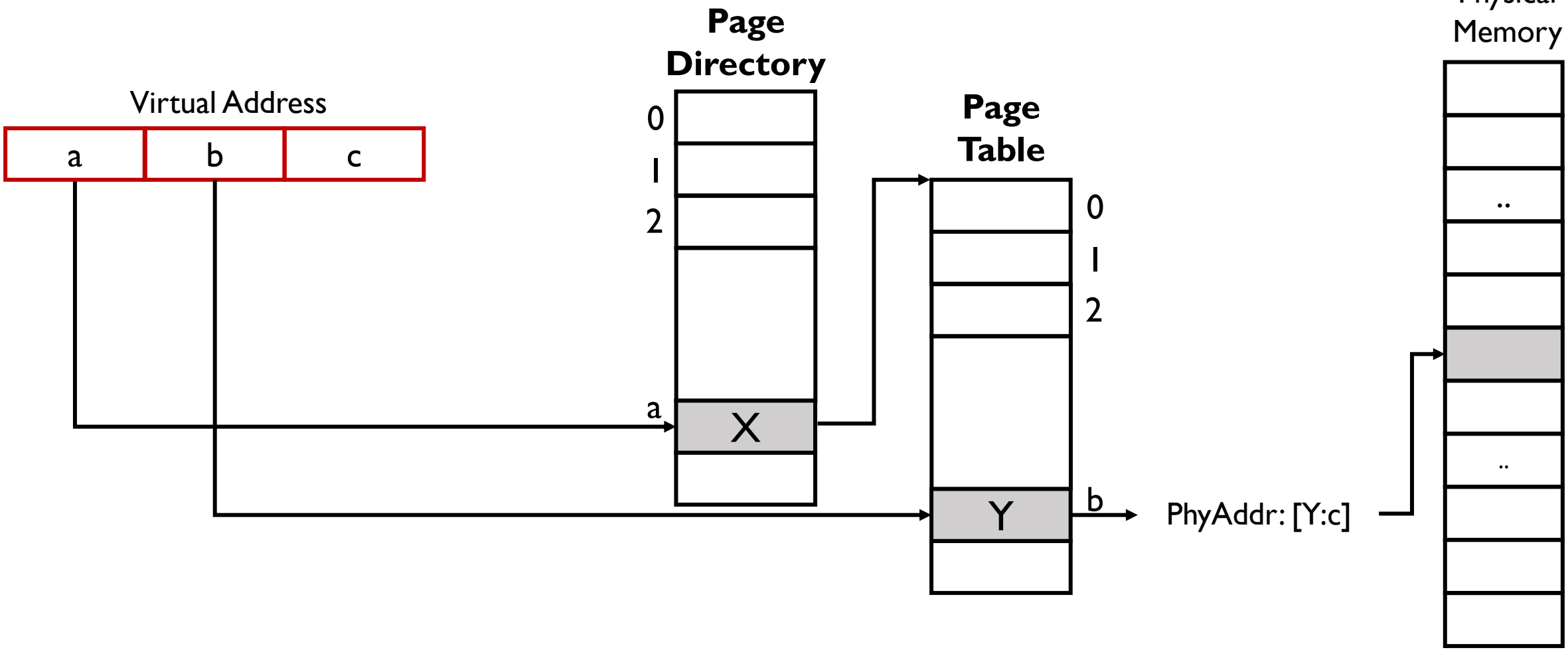

Manipulating Page Table

- Since OS only sees the virtual address, how can it manipulate the page table, e.g., getting the physical address of a given virtual address

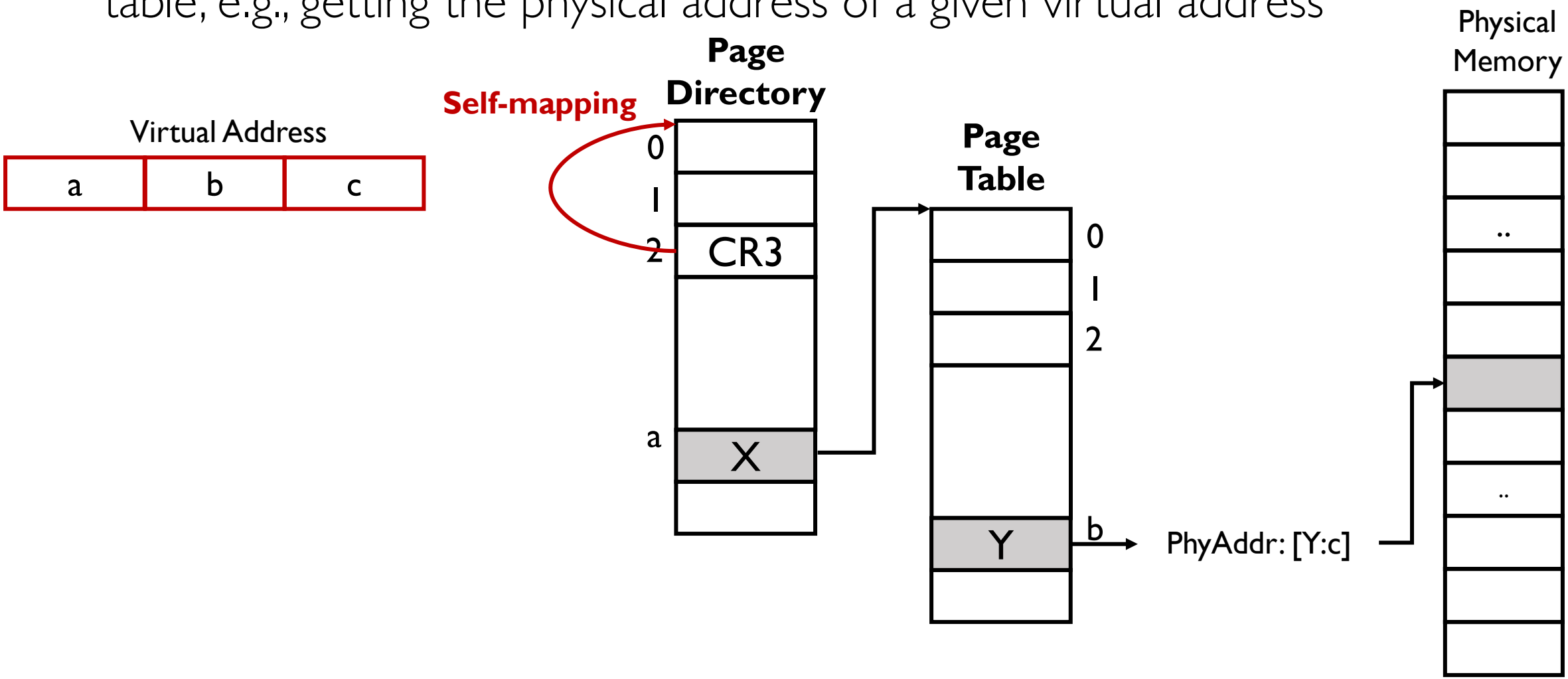

Manipulating Page Table

- Since OS only sees the virtual address, how can it manipulate the page table, e.g., getting the physical address of a given virtual address

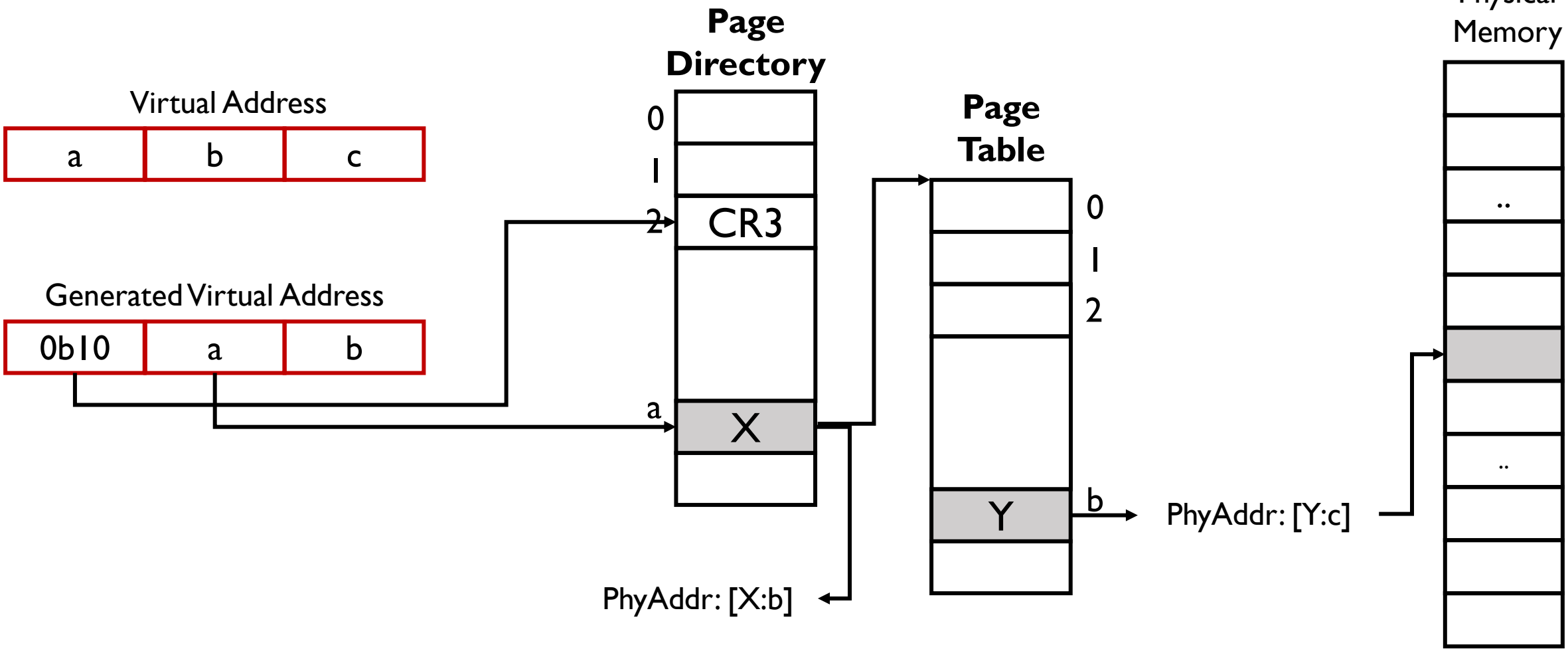

Manipulating Page Table

- Since OS only sees the virtual address, how can it manipulate the page table, e.g., getting the physical address of a given virtual address

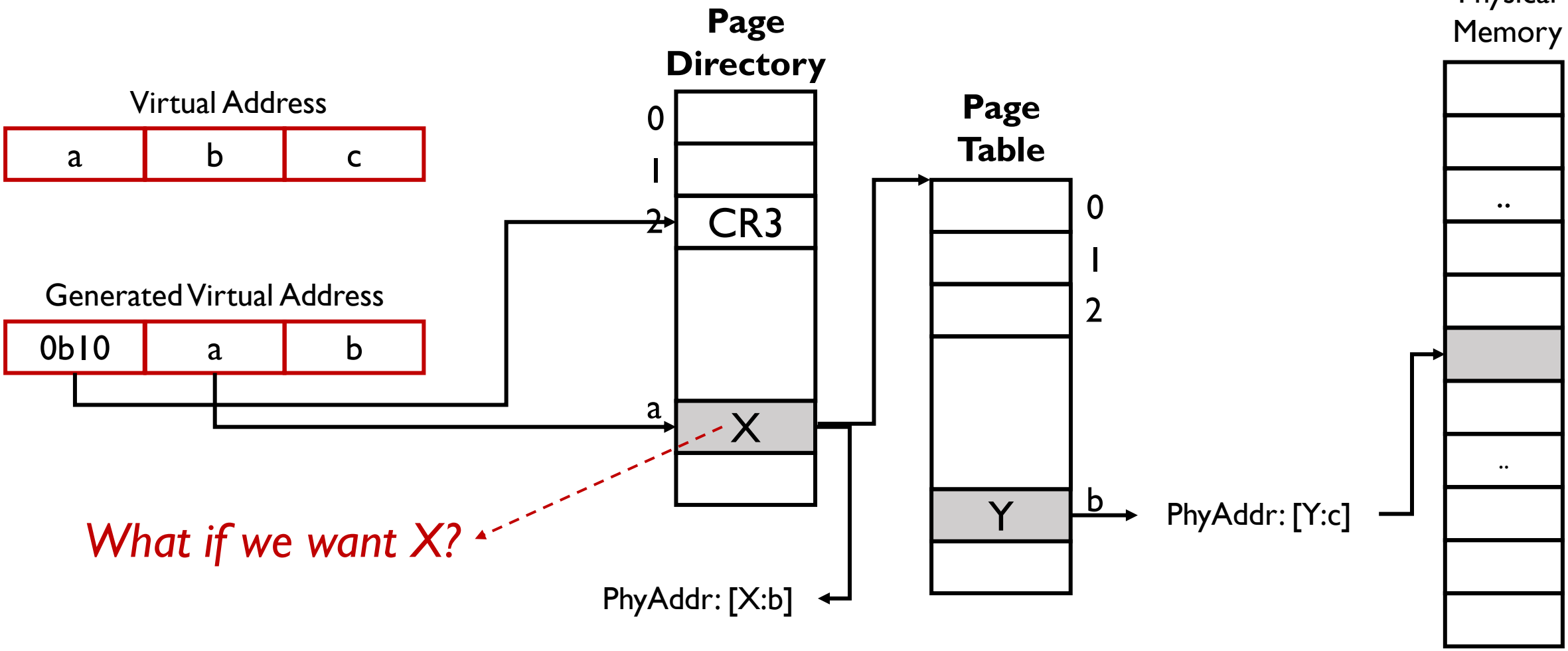

Manipulating Page Table

- Since OS only sees the virtual address, how can it manipulate the page table, e.g., getting the physical address of a given virtual address

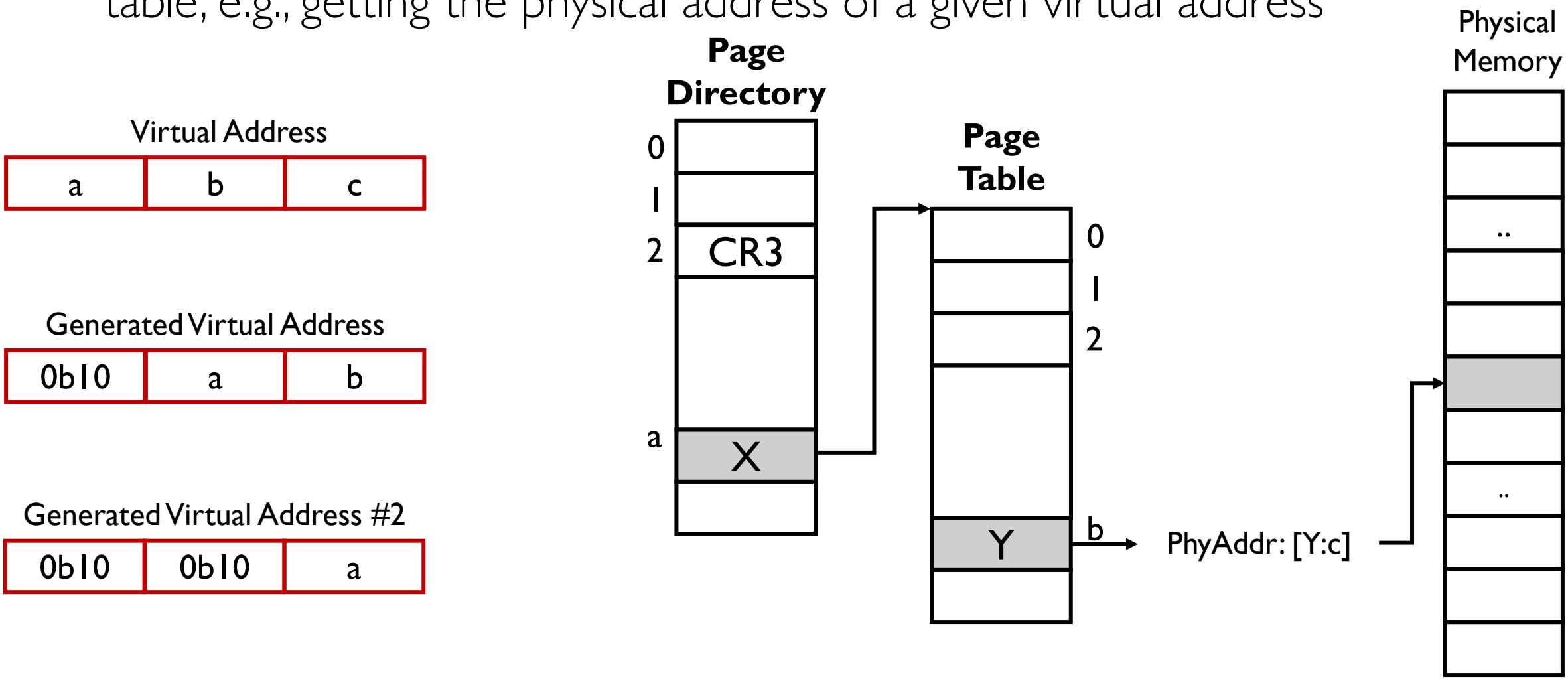

x86_64 Multi-level Paging

- 4-level: 48 bits

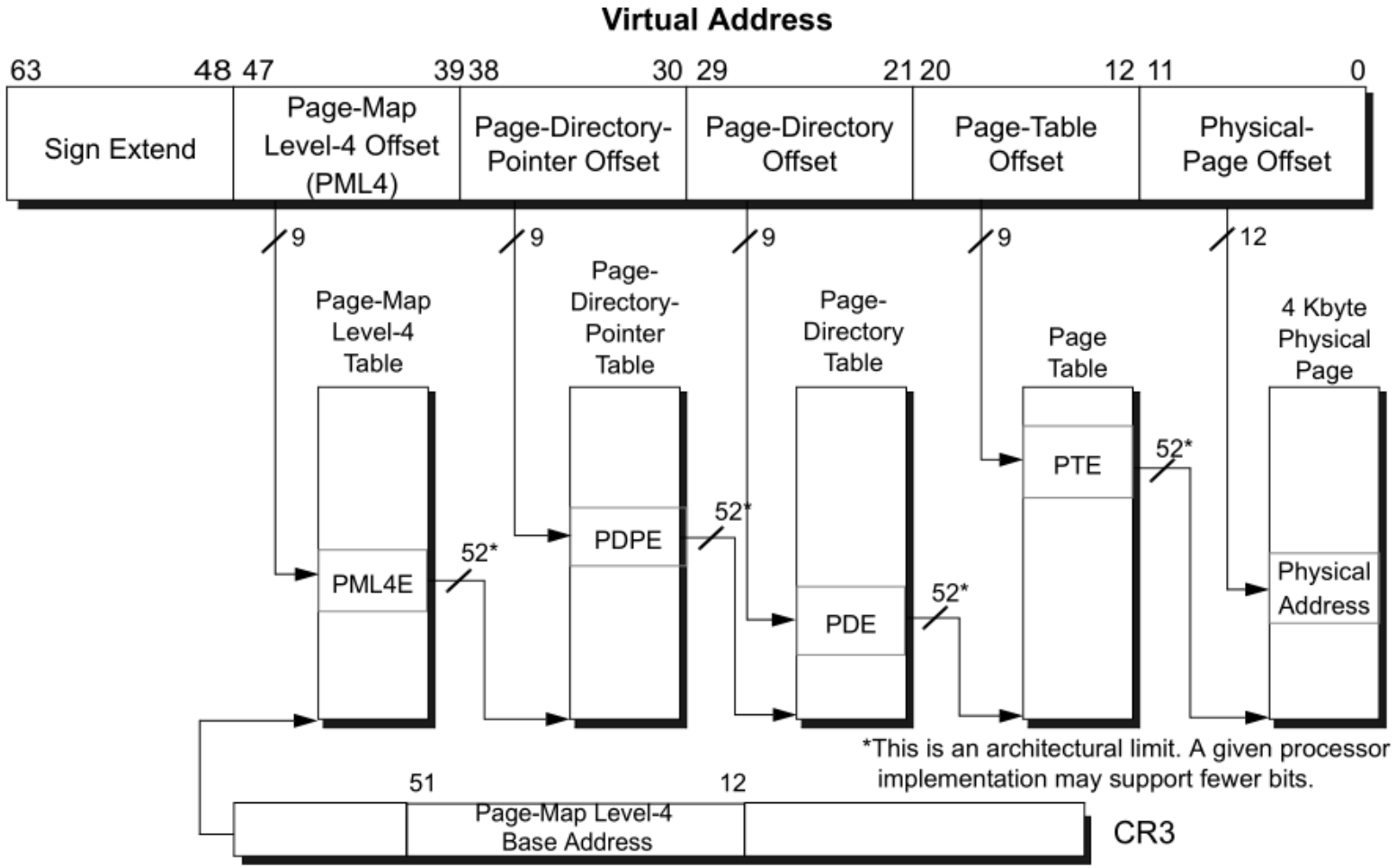

Figure 5-17. 4-Kbyte Page Translation—Long Mode

x86_64 Multi-level Paging

- 4-level: 48 bits
- 5-level: 64 bits

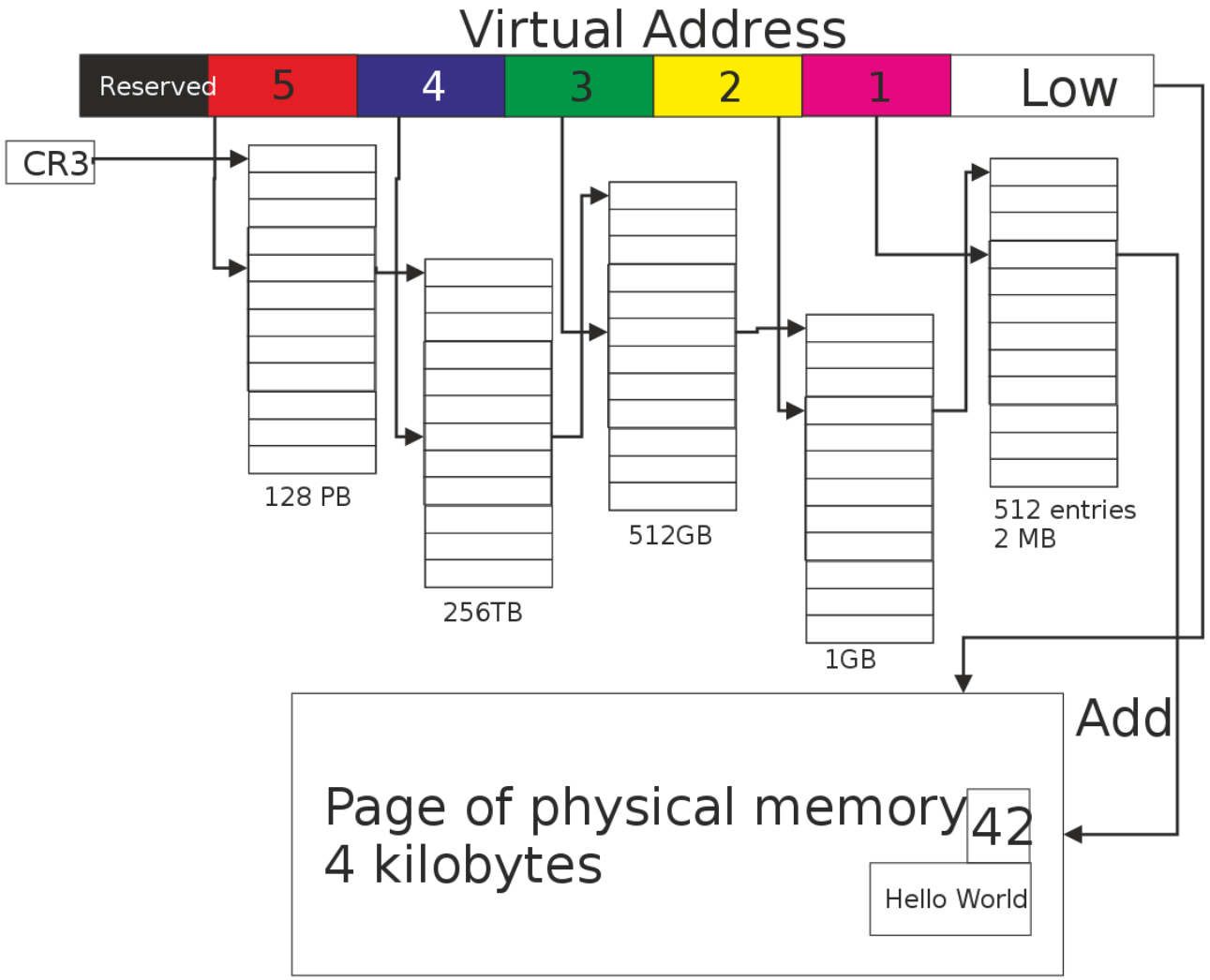

Multi-level Paging Summary

- Pros:
  - Only need to allocate as many page table entries as we need for application
    - In other wards, sparse address spaces are easy
  - Easy memory allocation
  - Easy Sharing
    - Share at segment or page level (need additional reference counting)
- Cons:
  - One pointer per page (typically 4K – 16K pages today)
  - Page tables need to be contiguous
    - However, previous example keeps tables to exactly one page in size
  - Two (or more, if >2 levels) lookups per reference
    - Seems very expensive!

Segments + Paging

- What about a tree of tables?
  - Lowest level page table ⇒ memory still allocated with bitmap
  - Higher levels often segmented
- Could have any number of levels. Example (top segment):

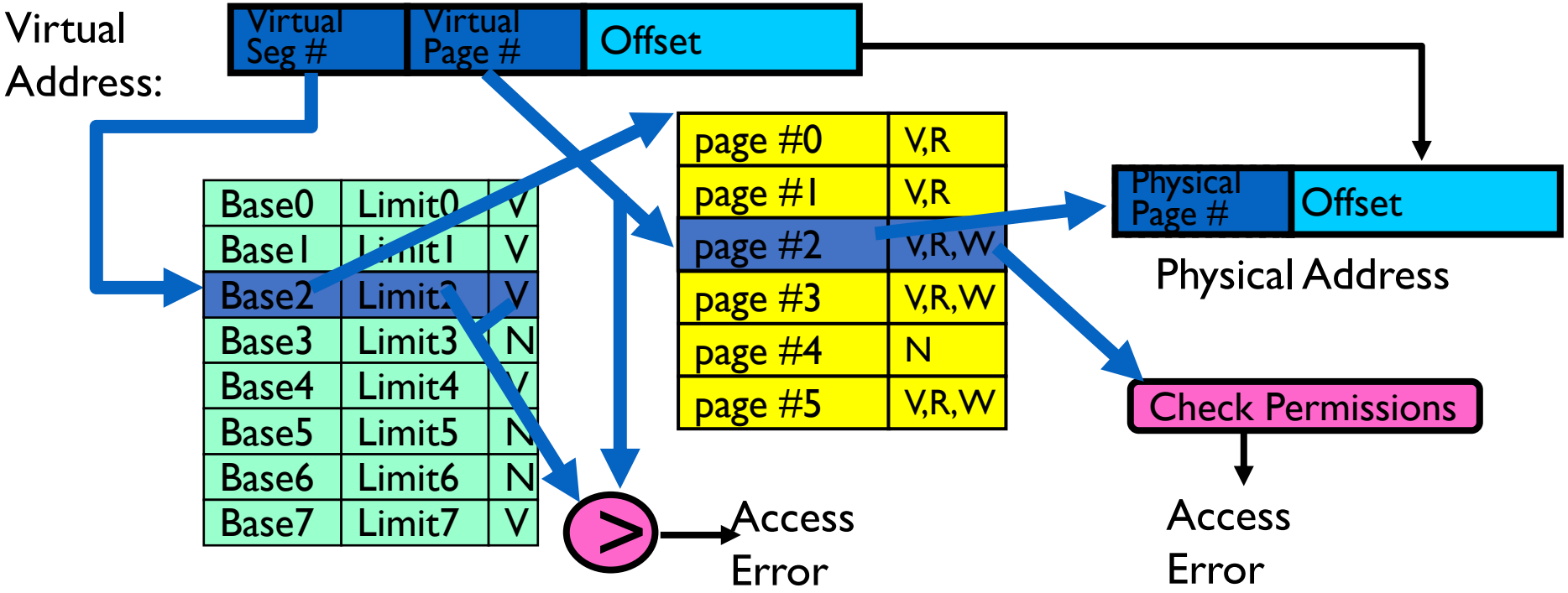

Segmentation vs. Paging

- Intel x86 and Linux
  - 8086 era: segmentation and paging are both used
  - 80386 era: the segmentation is not really used
    - The processor provides 4 modes: none; paging only; segmentation only; both.
    - The CS is always set to 0 and the limit is 2^32.
  - x86_64 era: segmentation is considered as a legacy and not used in most OSes

- Now, everyone uses paging, few make any real use of segmentation.

https://softwareengineering.stackexchange.com/questions/100047/why-not-segmentation

Copy-on-Write (COW)

- How to implement an efficient fork()?
  - Do not copy all contents immediately, but mark the page/segment tables of both child and parent processes as "read-only"
  - When a write (from either child or parent) happens, it traps into kernel through page fault, and a private page is copied.

- A fork() followed immediately by a exec(), how many pages are really copied?

Homework

- Look at the function get_physaddr in https://wiki.osdev.org/Paging#Manipulation, and explain how it works line by line.

- If the page size is 8K, how the address translation will work? Explain step by step in details, e.g., how the virtual address is splited, how large is the page directory and page table, etc..